Ruijie Reyee RG-ES200 Series Switches

RG-ES205GC-P&RG-ES209GC-P&RG-ES218GC-P&RG-ES226GC-P&RG-ES224GC&RG-ES216GC,RG-ES205GC&RG-ES208GC&RG-ES206GC-P&RG-ES210GC-LP

Installation Guide

Document version: V1.7
Date: 2025.09.30
Copyright © 2025 Ruijie Networks

Copyright

Copyright © 2025 Ruijie Networks

All rights are reserved in this document and this statement.

Without the prior written consent of Ruijie Networks, no organization or individual is permitted to reproduce, extract, back up, modify, or distribute the content of this document in any manner or form. It is also prohibited to translate the document into other languages or use any or all parts of it for commercial purposes.

Ruijie, Reyee and other Ruijie networks logos are trademarks of Ruijie Networks.

All other trademarks or registered trademarks mentioned in this document are owned by their respective owners.

Disclaimer

The products, services, or features that you purchase are subject to commercial contracts and terms. It is possible that some or all of the products, services, or features described in this document may not be available for purchase or use. Unless agreed upon otherwise in the contract, Ruijie Networks does not provide any explicit or implicit statements or warranties regarding the content of this document.

The names, links, descriptions, screenshots, and any other information regarding third-party software mentioned in this document are provided for your reference only. Ruijie Networks does not explicitly or implicitly endorse or recommend the use of any third-party software and does not make any assurances or guarantees concerning the applicability, security, or legality of such software. You should choose and use third-party software based on your business requirements and obtain proper authorization. Ruijie Networks assumes no liability for any risks or damages arising from your use of third-party software.

The content of this document is subject to constant change due to product version upgrades or other reasons. Thus, Ruijie Networks reserves the right to modify the content of the document without prior notice or prompt.

This manual serves solely as a user guide. While Ruijie Networks endeavors to ensure the accuracy and reliability of the content when compiling this manual, it does not guarantee that the content of the manual is free of errors or omissions. All information contained in this manual does not constitute any explicit or implicit warranties.

Preface

Intended Audience

This document is intended for:

- Network engineers
- Technical support and servicing engineers
- Network administrators

Technical Support

- Ruijie Reyee website: https://reyee.ruijie.com
- Online support center: https://reyee.ruijie.com/en-global/support
- Case portal: https://www.ruijie.com/support/caseportal
- Community: https://community.ruijie.com
- Email support: service_rj@ruijie.com
- Live chat: https://reyee.ruijie.com/en-global/rita

Conventions

1. Signs

The signs used in this document are described as follows:

Danger

An alert that calls attention to safety instruction that if not understood or followed can result in personal injury.

Warning

An alert that calls attention to important rules and information that if not understood or followed can result in data loss or equipment damage.

Caution

An alert that calls attention to essential information that if not understood or followed can result in function failure or performance degradation.

Note

An alert that contains additional or supplementary information that if not understood or followed will not lead to serious consequences.

Specification

An alert that contains a description of product or version support.

2. Notes

This manual provides installation steps, troubleshooting, technical specifications, and usage guidelines for cables and connectors. It is intended for users who want to understand the above and have extensive experience in network deployment and management, and assume that users are familiar with related terms and concepts.

Contents

Preface I

1 Product Overview 1

1.1 RG-ES205GC-P 2

1.2 RG-ES209GC-P 6

1.3 RG-ES218GC-P 10

1.4 RG-ES226GC-P 14

1.5 RG-ES224GC 18

1.6 RG-ES216GC 21

1.7 RG-ES205GC 24

1.8 RG-ES208GC 28

1.9 RG-ES206GC-P 32

1.10 RG-ES210GC-LP 36

2 Preparation Before Installation 40

2.1 Safety Suggestions 40

2.1.1 Installation 40

2.1.2 Movement 40

2.1.3 Electricity 40

2.1.4 Static Discharge Damage Prevention 41

2.1.5 Laser 41

2.2 Installation Site Requirements 42

2.2.1 Ventilation 42

2.2.2 Temperature and Humidity 42

2.2.3 Cleanness 43

2.2.4 Interference Resistance 43
2.2.5 Grounding 44
2.2.6 Lightning Resistance 45
2.2.7 EMI 45
2.3 Installation Tools 46
3 Product Installation 47
3.1 Installation Flowchart 47
3.2 Confirmations Before Installation 47
3.3 Installing the RG-ES200 48
3.3.1 Mounting the Switch to a Standard 19-inch Rack 48
3.3.2 Mounting the Switch Against a Wall 50
3.3.3 Mounting the Switch on a Table 51
3.4 Checking After Installation 53
4 System Check 53
4.1 Startup Check 53
4.1.1 Checking Before the Device Is Powered On 53
4.1.2 Checking After Program Startup (Recommended) 54
5 Maintenance and Troubleshooting 54
5.1 Troubleshooting Procedure 54
5.2 Troubleshooting Common Faults 54
6 Appendix A Connectors and Connection Media 55
7 Appendix B Mini-GBIC and SFP+ Module 57
8 Appendix C Surge Protection 60
9 Appendix D Cabling Recommendations in Installation 62

10 Appendix E Site Selection 66

1 Product Overview

The RG-ES200 series switches include the following models.

Table 1-1 RG-ES200 Series Switches

Model	10/100Base-T Auto-sensing Ethernet Port	10/100/1000Base-T Auto-sensing Ethernet Port	1000Base-X SFP Port	Console Port
RG-ES205GC-P	N/A	5 (ports 1–4 support PoE/PoE+)	N/A	N/A
RG-ES209GC-P	N/A	9 (ports 1–8 support PoE/PoE+)	N/A	N/A
RG-ES218GC-P	N/A	16 (PoE+/PoE support)	2	N/A
RG-ES226GC-P	N/A	24 (PoE+/PoE support)	2	N/A
RG-ES224GC	N/A	24	N/A	N/A
RG-ES216GC	N/A	16	N/A	N/A
RG-ES205GC	N/A	5	N/A	N/A
RG-ES208GC	N/A	8	N/A	N/A
RG-ES206GC-P	N/A	6 (ports 1–4 support PoE/PoE+)	N/A	N/A
RG-ES210GC-LP	N/A	10 (ports 1–8 support PoE/PoE+)	N/A	N/A

Note

- The SFP port is not backward compatible with 100Base-FX.
- 1000Base-T is compatible with 100Base-TX and 10Base-T in the downlink direction.

1.1 RG-ES205GC-P

Technical Specifications

System Specifications	Flash memory	4 MB
	Forwarding rate	7.4 Mpps
Port Specifications	Total number of RJ45 ports	5
	Number of 10/100/1000BASE-T ports	5
	Reset button	1
	DIP switch	● LED mode switch toggled to left (Mode 1): The port LED status indicates the status of traffic transmission. Solid green means that the port is link up, while blinking green means that the port is transmitting and receiving data. ● LED mode switch toggled to right (Mode 2): The port LED status indicates the PoE status. Solid green means that the port is supplying power, while blinking green means that the port is in power overload state.
Power Supply and Consumption	PoE Out standard	PoE/PoE+ (IEEE 802.3af/at)
	Number of PoE/PoE+ Out ports	4
	PoE budget per port	30 W
	PoE budget	54 W
	PoE power pins	1–2 (+), 3–6 (-)
	Power input	DC adapter: ● Rated input voltage: 100 V AC to 240 V AC, 50 Hz to 60 Hz ● Maximum input voltage: 90 V AC to 264 V AC, 47 Hz to 63 Hz ● Rated input current: 1.5 A Output： ● Rated output voltage: 54 V DC ● Maximum output current: 1.11 A
	Maximum power consumption	● 5 W (with no PoE load) ● 60 W (with PoE full load)
	Power supply	DC power adapter
Dimensions and Weight	Casing	Metal

	Product dimensions (W x D x H)	148 mm x 78 mm x 26 mm (5.83 in. x 3.07 in. x 1.02 in.)
	Weight	● 0.30 kg (0.66 lbs) (without packaging materials) ● 0.86 kg (1.89 lbs) (with packaging materials)
System Specifications	Switching capacity	10 Gbps(bit/s)
Environment and Reliability	Fan	Fanless design
	Cooling	Natural cooling
	Mounting options	Wall/Desk
	Hot swapping of cables	Hot swapping supported by the service port and power connector
	MTBF	200,000 hours
	Operating temperature	0°C to 40°C (32°F to 104°F)
	Storage temperature	–40°C to +70°C (–40°F to +158°F)
	Operating humidity	10% RH to 90% RH (non-condensing)
	Storage humidity	5% RH to 95% RH (non-condensing)
	Altitude	–500 m to +5,000 m (–1,640.42 ft. to +16,404.20 ft.)
	ESD protection	● Air discharge: 6 kV ● Contact discharge: 4 kV
	Surge protection	● Service port: ±4 kV for common mode ● Power connector: ±4 kV for common mode and ±2 kV for differential mode
	Earth Leakage Current	≤ 1.5 mA
Certification and Regulatory Compliance	EMC	EN 55032 EN 61000-3-2 EN 61000-3-3 EN 55035 EN 300 386
	Safety compliance	EN 62638-1
	Certification	CE
Interface	EEE	Yes

Warning

Operation of this equipment in a residential environment could cause radio interference.

Product Appearance

On the front panel, the RG-ES205GC-P Ethernet switch provides five 10/100/1000Base-T Ethernet ports. On the back panel, it provides a DC power socket.

Figure 1-1 Appearance of the RG-ES205GC-P

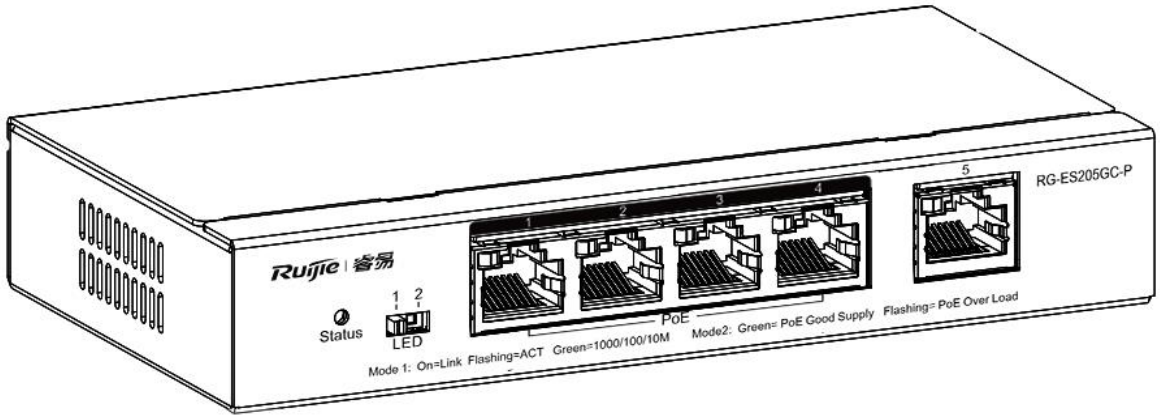

Front Panel

Figure 1-2 Front Panel of the RG-ES205GC-P

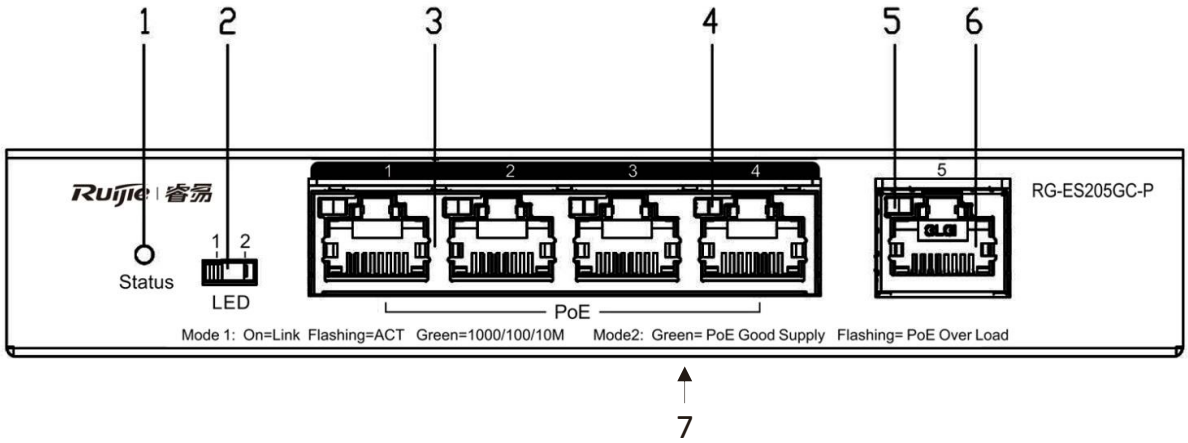

Note:	1. System status LED 2. Port mode switchover button 3. 10/100/1000Base-T auto-sensing Ethernet port	4. Electrical port status LED 5. Electrical port status LED 6. 10/100/1000Base-T auto-sensing Ethernet port 7. Nameplate on the bottom of the device

Back Panel

Figure 1-3 Back Panel of the RG-ES205GC-P

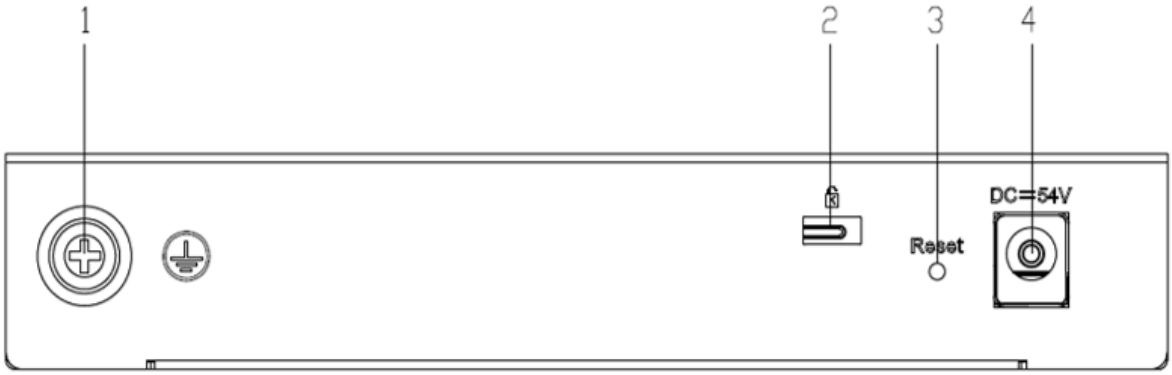

Note:	1. Grounding pole 2. Hole for anti-theft lock	3. System reset button 4. DC power socket

Note

- The switch restarts after the reset button is pressed for less than 2 seconds.
- The switch restores the default factory settings after the reset button is pressed for more than 5 seconds (until the status LED blinks).

Heat Dissipation

The RG-ES205GC-P adopts natural heat dissipation, thereby ensuring normal operation. You must reserve 10 cm distance space at both sides and the back plane of the cabinet to allow airflow. It is recommended that you clean the device once every three months to avoid dust from blocking vents.

LEDs

LED	Panel Identification	State	Meaning
System status LED	Status	Off	The switch is not receiving power.
		Blinking green	The PoE power exceeds the power of the entire device (54 W). The newly connected PD cannot be powered up due to insufficient power. The switching function is operational.
		Solid green	The switch is operational.
	1–4	Off	PoE is not enabled.

LED	Panel Identification	State	Meaning
RJ45 port PoE status LED		Solid green	PoE is enabled. The port is operational.
		Blinking green	PoE overload.
10/100/1000 Mbps RJ45 port status LED	1–5	Off	The port is not connected.
		Solid green	The port is connected at a rate of 10/100/1000 Mbps.
		Blinking green	The port is receiving or transmitting traffic at a rate of 10/100/1000 Mbps.

1.2 RG-ES209GC-P

Technical Specifications

System Specifications	Flash memory	4 MB
	Forwarding rate	13.4 Mpps
Port Specifications	Total number of RJ45 ports	9
	Number of 10/100/1000BASE-T ports	9
	Reset button	1
	DIP switch	● LED mode switch toggled to left (Mode 1): The port LED status indicates the status of traffic transmission. Solid green means that the port is link up, while blinking green means that the port is transmitting and receiving data. ● LED mode switch toggled to right (Mode 2): The port LED status indicates the PoE status. Solid green means that the port is supplying power, while blinking green means that the port is in power overload state.
Power Supply and Consumption	PoE Out standard	PoE/PoE+ (IEEE 802.3af/at)
	Number of PoE/PoE+ Out ports	8
	PoE budget per port	30 W
	PoE budget	120 W
	PoE power pins	1–2 (+), 3–6 (-)
	Power input	DC adapter:

		● Rated input voltage: 100 V AC to 240 V AC, 50 Hz to 60 Hz ● Maximum input voltage: 90 V AC to 264 V AC, 47 Hz to 63 Hz ● Rated input current: 2.5 A Output： ● Rated output voltage: 54 V DC ● Maximum output current: 2.4 A
	Maximum power consumption	● 10 W (with no PoE load) ● 120 W (with PoE full load)
	Power supply	DC power adapter
Dimensions and Weight	Casing	Metal
	Product dimensions (W x D x H)	202 mm x 108 mm x 28 mm (7.95 in. x 4.25 in. x 1.10 in.)
	Weight	● 0.53 kg (1.17 lbs) (without packaging materials) ● 1.60 kg (3.53 lbs) (with packaging materials)
System Specifications	Switching capacity	18 Gbps(bit/s)
Environment and Reliability	Fan	Fanless design
	Cooling	Natural cooling
	Mounting options	Wall/Desk
	Hot swapping of cables	Hot swapping supported by the service port and power connector
	MTBF	200,000 hours
	Operating temperature	0°C to 40°C (32°F to 104°F)
	Storage temperature	–40°C to +70°C (–40°F to +158°F)
	Operating humidity	10% RH to 90% RH (non-condensing)
	Storage humidity	5% RH to 95% RH (non-condensing)
	Altitude	–500 m to +5,000 m (–1,640.42 ft. to +16,404.20 ft.)
	ESD protection	● Air discharge: 6 kV ● Contact discharge: 4 kV
	Surge protection	● Service port: ±4 kV for common mode ● Power connector: ±4 kV for common mode and ±2 kV for differential mode

	Earth Leakage Current	≤ 1.5 mA
Certification and Regulatory Compliance	EMC	EN 55032 EN 61000-3-2 EN 61000-3-3 EN 55035 EN 300 386
	Safety compliance	EN 62638-1
	Certification	CE, FCC
Interface	EEE	Yes

Warning

Operation of this equipment in a residential environment could cause radio interference.

Product Appearance

On the front panel, the RG-ES209GC-P Ethernet switch provides nine 10/100/1000Base-T Ethernet ports. On the back panel, it provides a DC power socket.

Figure 1-4 Appearance of the RG-ES209GC-P

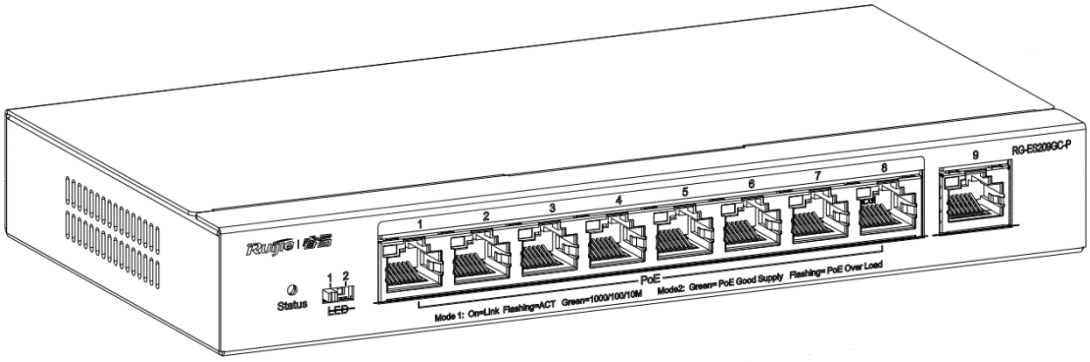

Front Panel

Figure 1-5 Front Panel of the RG-ES209GC-P

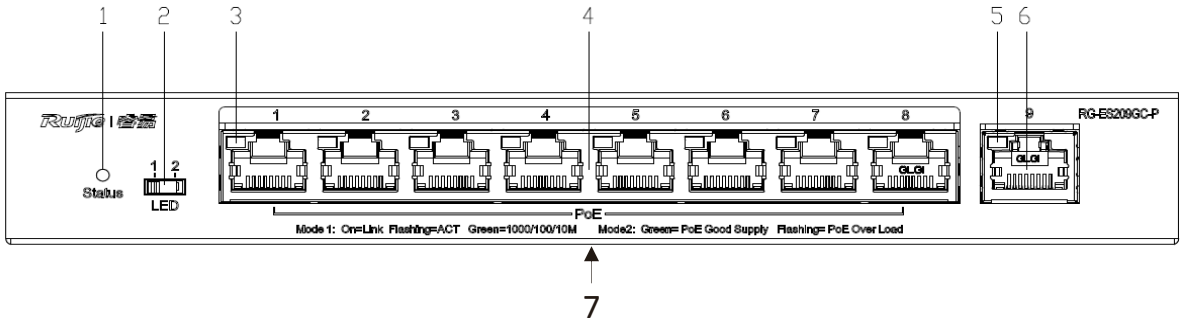

Note:	1. System status LED 2. Port mode switchover button 3. Electrical port status LED 4. 10/100/1000Base-T auto-sensing Ethernet port	5. Electrical port status LED 6. 10/100/1000Base-T auto-sensing Ethernet port 7. Nameplate on the bottom of the device

Back Panel

Figure 1-6 Back Panel of the RG-ES209GC-P

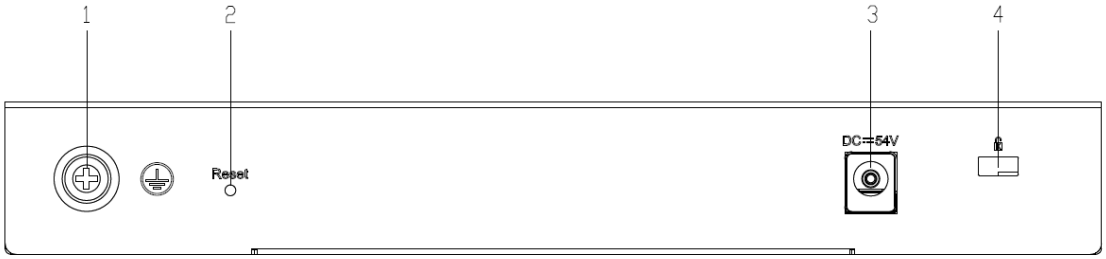

Note:	1. Grounding pole 2. System reset button	3. DC power socket 4. Hole for anti-theft lock

Note

- The switch restarts after the reset button is pressed for less than 2 seconds.
- The switch restores the default factory settings after the reset button is pressed for more than 5 seconds (until the status LED blinks).

Heat Dissipation

The RG-ES209GC-P adopts natural heat dissipation, thereby ensuring normal operation. You must reserve 10 cm distance space at both sides and the back plane of the cabinet to allow airflow. It is recommended that you clean the device once every three months to avoid dust from blocking vents.

LEDs

LED	Panel Identification	State	Meaning
System status LED	Status	Off	The switch is not receiving power.
		Blinking green	The PoE power exceeds the power of the entire device (120 W). The newly connected PD cannot be powered up due to insufficient power. The switching function is operational.
		Solid green	The switch is operational.
RJ45 port PoE status LED	1–8	Off	PoE is not enabled.
		Solid green	PoE is enabled. The port is operational.
		Blinking green	PoE overload.
10/100/1000 Mbps RJ45 port status LED	1–9	Off	The port is not connected.
		Solid green	The port is connected at a rate of 10/100/1000 Mbps.
		Blinking green	The port is receiving or transmitting traffic at a rate of 10/100/1000 Mbps.

1.3 RG-ES218GC-P

Technical Specifications

Model	RG-ES218GC-P
Port	Sixteen 10/100/1000 Base-T auto-sensing Ethernet ports Two 1000 Mbps SFP ports
Optical Module	The copper cable is not supported. For details, see Appendix B. **Note** The supported module type may change at any time.
SFP Port	1000Base-X modules

Model	RG-ES218GC-P
Power Supply	AC input Rated voltage range: 100 V to 240 V Maximum voltage range: 90 V to 264 V Frequency: 50/60 Hz Rated current: 6A
EEE	Not supported
PoE	PoE/PoE+ support Ports 1 to 16 support PoE/PoE+ with the maximum power output of 30 W per port. The overall maximum output power of PoE/PoE+ is 240 W.
PoE Mode	Mode A (data pairs 1-2 and 3-6)
Power Consumption	Less than 15 W with no PoE load Less than 255 W with PoE full load
Operating Temperature	0°C to 40°C (32°F to 104°F)
Storage Temperature	-40°C to +70°C (-40°F to +158°F)
Operating Humidity	10% to 90% RH (non-condensing)
Storage Humidity	5% to 95% RH (non-condensing)
Fan	Supports adaptive speed adjustment. The fan stops running when the ambient temperature is lower than 25°C and the PoE power is less than 120 W.
Temperature Warning	Not supported
Accessing Optical Module Information	Not supported
Certification	CE；FCC
Earth Leakage Current	≤ 1.5 mA
Dimensions (W x D x H)	300 mm x 230 mm x 43.6 mm
Net Weight	2.99kg

Warning

Operation of this equipment in a residential environment could cause radio interference.

Product Appearance

On the front panel, the RG-ES218GC-P Ethernet switch provides sixteen 10/100/1000Base-T Ethernet ports, and two 1000 Mbps SFP ports. On the back panel, it provides an AC power socket.

Figure 1-7 Appearance of the RG-ES218GC-P

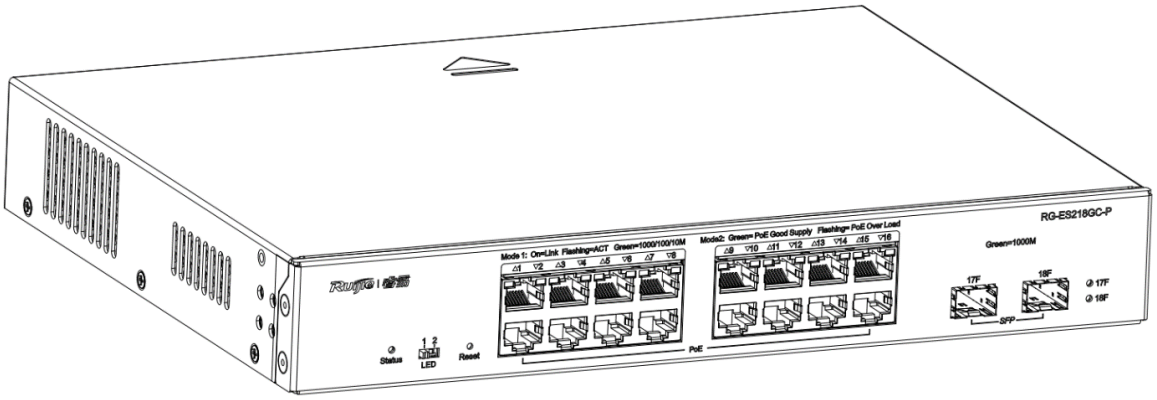

Front Panel

Figure 1-8 Front Panel of the RG-ES218GC-P

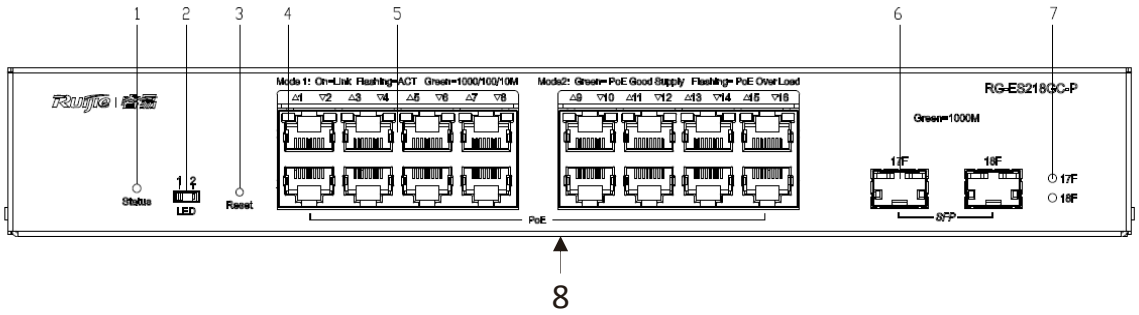

Note:	1. Power status LED 2. Port mode switchover button 3. System reset button 4. Electrical port status LED	5. 10/100/1000Base-T auto-sensing Ethernet port 6. SFP port 7. SFP port status LED 8. Nameplate on the bottom of the device

Note:

- When the button is turned to the left position (Mode 1), the LED indicates the switching status of the port. When the LED is solid green, the link is Up. When the LED blinks green, data is being transmitted or received.
- When the button is turned to the right position (Mode 2), the LED indicates the PoE status of ports. When the LED is solid green, the PoE-supported ports are supplying power. When the LED blinks green, the power of the ports is overloaded.
- The switch restarts after the reset button is pressed for less than 2 seconds.
- The switch restores the default factory settings after the reset button is pressed for more than 5 seconds (until the status LED blinks).

Back Panel

Figure 1-9 Back Panel of the RG-ES218GC-P

Note:	1. Protective earthing terminal	2. AC power socket

Note:

- This device relies on the separate protective earthing terminal.
- The device installation must be permanently grounded.
- The device must be intended to be used in a location with equipotential bonding (such as a telecommunication center, a dedicated computer room, or a restricted access area).

Heat Dissipation

The RG-ES218GC-P adopts fans for heat dissipation, thereby ensuring normal operation. You must reserve 10 cm distance space at both sides and the back plane of the cabinet to allow airflow. It is recommended that you clean the device once every three months to avoid dust from blocking vents.

LEDs

LED	Panel Identification	State	Meaning
	Status	Off	The switch is not receiving power.

LED	Panel Identification	State	Meaning
System status LED		Blinking green	The PoE power exceeds the power of the entire device (240 W). The newly connected PD cannot be powered up due to insufficient power. The switching function is operational.
		Solid green	The switch is operational.
RJ45 port PoE status LED	1–16	Off	PoE is not enabled.
		Solid green	PoE is enabled. The port is operational.
		Blinking green	PoE overload.
1000 Mbps RJ45 port status LED	1–16	Off	The port is not connected.
		Solid green	The port is connected at a rate of 10/100/1000 Mbps.
		Blinking green	The port is receiving or transmitting traffic at a rate of 10/100/1000 Mbps.
SFP port status LED	17F–18F	Off	The port is not connected.
		Solid green	The port is connected at a rate of 1000 Mbps.
		Blinking green	The port is receiving or transmitting traffic at a rate of 1000 Mbps.

1.4 RG-ES226GC-P

Technical Specifications

Model	RG-ES226GC-P
Port	Twenty-four 10/100/1000 Base-T auto-sensing Ethernet ports Two 1000 Mbps SFP ports
Optical Module	The copper cable is not supported. For details, see Appendix B. **Note** The supported module type may change at any time.
SFP Port	1000Base-X modules
Power Supply	AC input

Model	RG-ES226GC-P
	Rated voltage range: 100 V to 240 V Maximum voltage range: 90 V to 264 V Frequency: 50/60 Hz Rated current: 6 A
EEE	Not supported
PoE	PoE/PoE+ support Ports 1 to 24 support PoE/PoE+ with the maximum power output of 30 W per port. The overall maximum output power of PoE/PoE+ is 370 W.
PoE Power Pins	1 2+, 3 6-
Power Consumption	Less than 25W with no PoE load Less than 400 W with PoE full load
Operating Temperature	0°C to 40°C (32°F to 104°F)
Storage Temperature	-40°C to +70°C (-40°F to +158°F)
Operating Humidity	10% to 90% RH (non-condensing)
Storage Humidity	5% to 95% RH (non-condensing)
Fan	Adaptive speed adjustment. The fan stops running when the ambient temperature is lower than 25°C and the PoE power is less than 185 W.
Temperature Warning	Not supported
Accessing Optical Module Information	Not supported
Certification	CE；FCC
Earth Leakage Current	≤ 1.5 mA
Dimensions (W x D x H)	440 mm x 289 mm x 43.6 mm
Net Weight	4.05kg

Warning

Operation of this equipment in a residential environment could cause radio interference.

Product Appearance

On the front panel, the RG-ES226GC-P Ethernet switch provides twenty-four 10/100/1000Base-T Ethernet ports, and two 1000 Mbps SFP ports. On the back panel, it provides an AC power socket.

Figure 1-10 Appearance of the RG-ES226GC-P

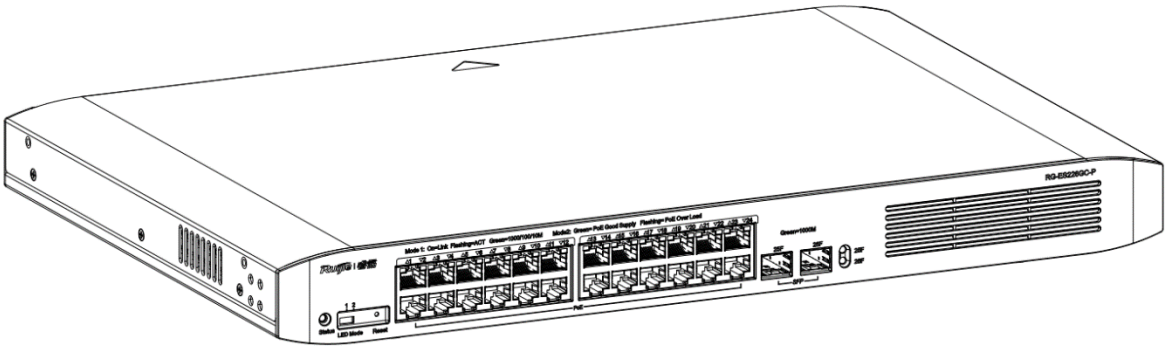

Front Panel

Figure 1-11 Front Panel of the RG-ES226GC-P

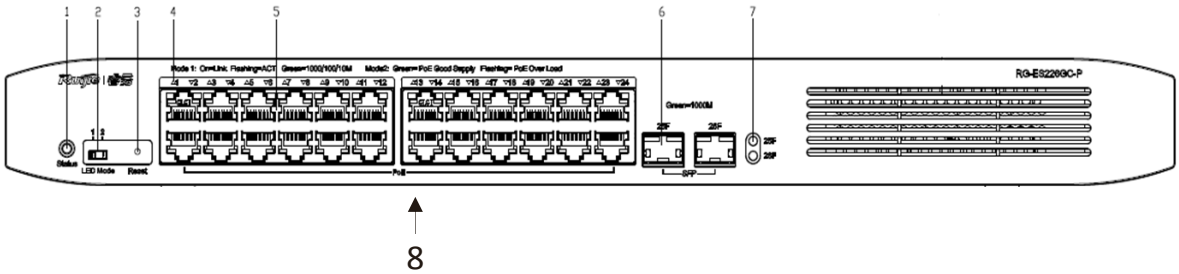

Note:	1. Power status LED 2. Port mode switchover button 3. System reset button 4. Electrical port status LED	5. 10/100/1000Base-T auto-sensing Ethernet port 6. SFP port 7. SFP port status LED 8. Nameplate on the bottom of the device

Note

- When the button is turned to the left position (Mode 1), the LED indicates the switching status of the port. When the LED is solid green, the link is Up. When the LED blinks green, data is being transmitted or received.
- When the button is turned to the right position (Mode 2), the LED indicates the PoE status of ports. When the LED is solid green, the PoE-supported ports are supplying power. When the LED blinks green, the power of the ports is overloaded.
- The switch restarts after the reset button is pressed for less than 2 seconds.
- The switch restores the default factory settings after the reset button is pressed for more than 5 seconds (until the status LED blinks).

Back Panel

Figure 1-12 Back Panel of the RG-ES226GC-P

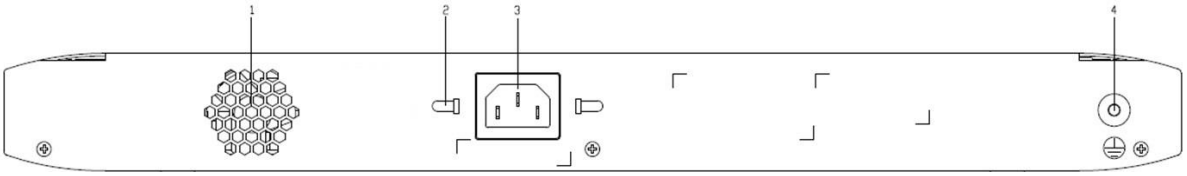

Note:	**1.**	Vent	**3.**	AC power socket
	2.	Power cord retention clip	**4.**	Protective earthing terminal

Note

- This device relies on the separate protective earthing terminal.
- The device installation must be permanently grounded.
- The device must be intended to be used in a location with equipotential bonding (such as a telecommunication center, a dedicated computer room, or a restricted access area).

Heat Dissipation

The RG-ES226GC-P adopts front-to-rear heat dissipation, thereby ensuring normal operation. You must reserve 10 cm distance space at both sides and the back plane of the cabinet to allow airflow. It is recommended that you clean the device once every three months to avoid dust from blocking vents.

LEDs

LED	Panel Identification	State	Meaning
	Status	Off	The switch is not receiving power.

LED	Panel Identification	State	Meaning
System status LED		Blinking green	The PoE power exceeds the power of the entire device (370 W). The newly connected PD cannot be powered up due to insufficient power. The switching function is operational.
		Solid green	The switch is operational.
RJ45 port PoE status LED	1–24	Off	PoE is not enabled.
		Solid green	PoE is enabled. The port is operational.
		Blinking green	PoE overload.
1000 Mbps RJ45 port status LED	1–24	Off	The port is not connected.
		Solid green	The port is connected at a rate of 10/100/1000 Mbps.
		Blinking green	The port is receiving or transmitting traffic at a rate of 10/100/1000 Mbps.
SFP port status LED	25F–26F	Off	The port is not connected.
		Solid green	The port is connected at a rate of 1000 Mbps.
		Blinking green	The port is receiving or transmitting traffic at a rate of 1000 Mbps.

1.5 RG-ES224GC

Technical Specifications

Model	RG-ES224GC
Port	Twenty-four 10/100/1000 Base-T auto-sensing Ethernet ports
Power Supply	● AC input Rated voltage range: 100 V to 240 V Maximum voltage range: 90 V to 264 V Frequency: 50/60 Hz Rated current: 0.6 A
EEE	Not supported
PoE	Not supported

Power Consumption	Less than 14 W
Operating Temperature	0°C to 50°C (32°F to 122°F)
Storage Temperature	-40°C to +70°C (-40°F to +158°F)
Operating Humidity	10% to 90% RH (non-condensing)
Storage Humidity	5% to 95% RH (non-condensing)
Number of Fans	Fanless
Temperature Warning	Not supported
Accessing Optical Module Information	Not supported
Certification	CE
Earth Leakage Current	≤ 3.5 mA
Dimensions (W x D x H)	440 mm x 165 mm x 44 mm
Net Weight	1.95kg

Warning

Operation of this equipment in a residential environment could cause radio interference.

Product Appearance

On the front panel, the RG-ES224GC Ethernet switch provides twenty-four 10/100/1000Base-T Ethernet ports. On the back panel, it provides an AC power socket.

Figure 1-13 Appearance of the RG-ES224GC

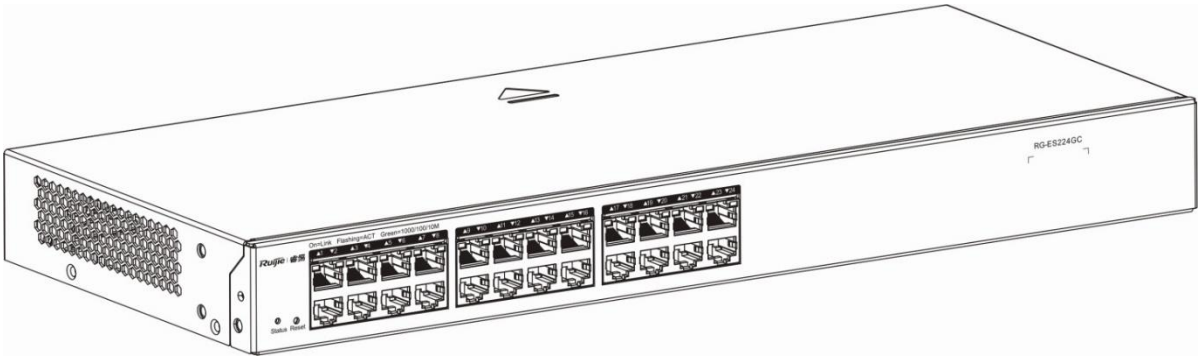

Front Panel

Figure 1-14 Front Panel of the RG-ES224GC

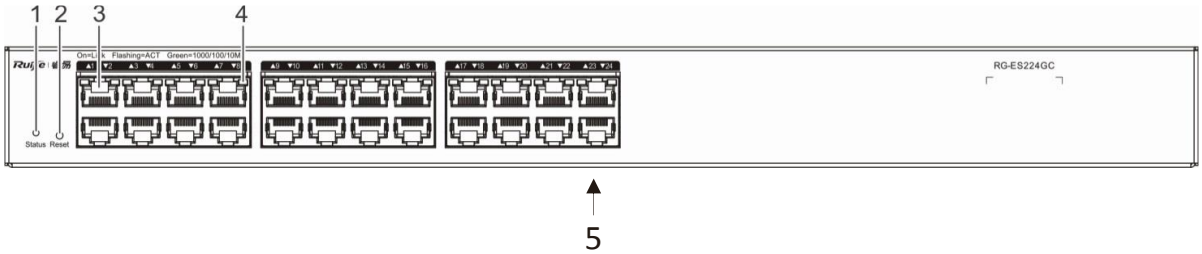

Note:	1. Power status LED 2. System reset button	3. 10/100/1000Base-T auto-sensing Ethernet port 4. Electrical port status LED 5. Nameplate on the bottom of the device

Note

- The switch restarts after the reset button is pressed for less than 2 seconds.
- The switch restores the default factory settings after the reset button is pressed for more than 5 seconds (until the status LED blinks).

Back Panel

Figure 1-15 Back Panel of the RG-ES224GC

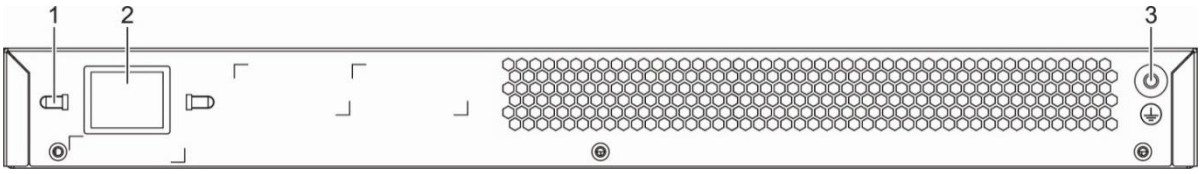

Note:	**1.** Power cord retention clip **2.** AC power socket	**3.** Protective earthing terminal

Note

- This device relies on the separate protective earthing terminal.
- The device installation must be permanently grounded.
- The device must be intended to be used in a location with equipotential bonding (such as a telecommunication center, a dedicated computer room, or a restricted access area).

Heat Dissipation

The RG-ES224GC adopts natural heat dissipation, thereby ensuring normal operation. You must reserve 10 cm distance space at both sides and the back plane of the cabinet to allow airflow. It is recommended that you clean the device once every three months to avoid dust from blocking vents.

LEDs

LED	Panel Identification	State	Meaning
System status LED	Status	Off	The switch is not receiving power.
		Blinking green	The switch is being upgraded or initialized.
		Solid green	The switch is operational.
1000 Mbps RJ45 port status LED	1–24	Off	The port is not connected.
		Solid green	The port is connected at a rate of 10/100/1000 Mbps.
		Blinking green	The port is receiving or transmitting traffic at a rate of 10/100/1000 Mbps.

1.6 RG-ES216GC

Technical Specifications

Model	RG-ES216GC
Port	Sixteen 10/100/1000 Base-T auto-sensing Ethernet ports
Power Supply	● AC input Rated voltage range: 100 V to 240 V Maximum voltage range: 90 V to 264 V Frequency: 50/60 Hz Rated current: 0.6A
EEE	Not supported
PoE	Not supported
Power Consumption	Less than 10 W
Operating Temperature	0°C to 50°C (32°F to 122°F)
Storage Temperature	-40°C to +70°C (-40°F to +158°F)

Model	RG-ES216GC
Operating Humidity	10% to 90% RH (non-condensing)
Storage Humidity	5% to 95% RH (non-condensing)
Number of Fans	Fanless
Temperature Warning	Not supported
Accessing Optical Module Information	Not supported
Certification	CE
Earth Leakage Current	≤ 3.5 mA
Dimensions (W x D x H)	440 mm x 165 mm x 44 mm
Net Weight	1.95kg

Warning

Operation of this equipment in a residential environment could cause radio interference.

Product Appearance

On the front panel, the RG-ES216GC Ethernet switch provides sixteen 10/100/1000Base-T Ethernet ports. On the back panel, it provides an AC power socket.

Figure 1-16 Appearance of the RG-ES216GC

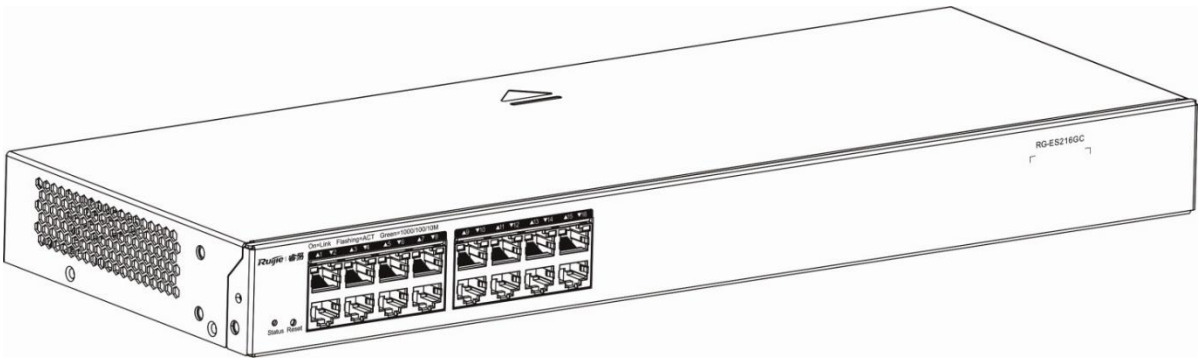

Front Panel

Figure 1-17 Front Panel of the RG-ES216GC

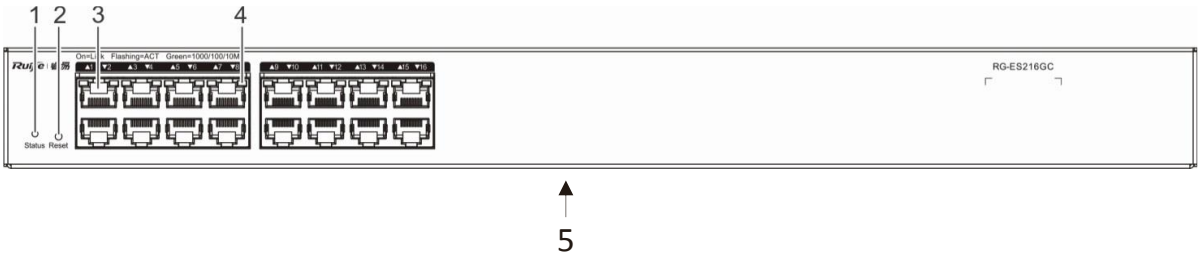

Note:	1. Power status LED 2. System reset button	3. 10/100/1000Base-T auto-sensing Ethernet port 4. Electrical port status LED 5. Nameplate on the bottom of the device

Note

- The switch restarts after the reset button is pressed for less than 2 seconds.
- The switch restores the default factory settings after the reset button is pressed for more than 5 seconds (until the status LED blinks).

Back Panel

Figure 1-18 Back Panel of the RG-ES216GC

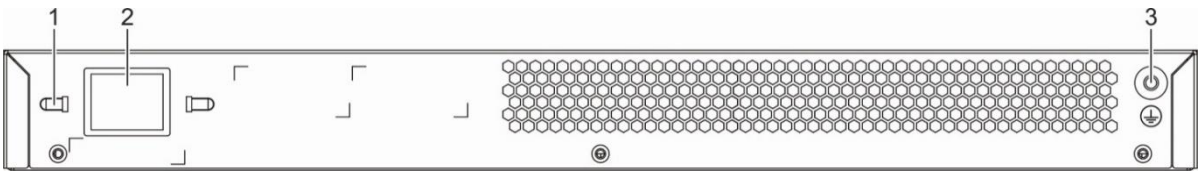

Note:	**1.** Power cord retention clip **2.** AC power socket	**3.** Protective earthing terminal

Note

- This device relies on the separate protective earthing terminal.
- The device installation must be permanently grounded.
- The device must be intended to be used in a location with equipotential bonding (such as a telecommunication center, a dedicated computer room, or a restricted access area).

Heat Dissipation

The RG-ES216GC adopts natural heat dissipation, thereby ensuring normal operation. You must reserve 10 cm distance space at both sides and the back plane of the cabinet to allow airflow. It is recommended that you clean the device once every three months to avoid dust from blocking vents.

LEDs

LED	Panel Identification	State	Meaning
System status LED	Status	Off	The switch is not receiving power.
		Blinking green	The switch is being upgraded or initialized.
		Solid green	The switch is operational.
1000 Mbps RJ45 port status LED	1–16	Off	The port is not connected.
		Solid green	The port is connected at a rate of 10/100/1000 Mbps.
		Blinking green	The port is receiving or transmitting traffic at a rate of 10/100/1000 Mbps.

1.7 RG-ES205GC

Technical Specifications

System Specifications	Flash memory	4 MB
	Forwarding rate	7.4 Mpps
Port Specifications	Total number of RJ45 ports	5
	Number of 10/100/1000BASE-T ports	5
	Reset button	1
Power Supply and Consumption	Power input	DC adapter: ● Rated input voltage: 100 V AC to 240 V AC, 50 Hz to 60 Hz ● Maximum input voltage: 90 V AC to 264 V AC, 47 Hz to 63 Hz ● Rated input current: 0.3 A Output： ● Rated output voltage: 5 V DC ● Maximum output current: 1 A

	Maximum power consumption	5 W
	Power supply	DC power adapter
Dimensions and Weight	Casing	Metal
	Product dimensions (W x D x H)	119 mm x 62 mm x 24 mm (4.69 in. x 2.44 in. x 0.95 in.)
	Weight	● 0.23 kg (0.51 lbs) (without packaging materials) ● 0.47 kg (1.04 lbs) (with packaging materials)
System Specifications	Switching capacity	10 Gbps(bit/s)
Environment and Reliability	Fan	Fanless design
	Cooling	Natural cooling
	Mounting options	Wall/Desk
	Hot swapping of cables	Hot swapping supported by the service port and power connector
	MTBF	200,000 hours
	Operating temperature	0°C to 40°C (32°F to 104°F)
	Storage temperature	–40°C to +70°C (–40°F to +158°F)
	Operating humidity	10% RH to 90% RH (non-condensing)
	Storage humidity	5% RH to 95% RH (non-condensing)
	Altitude	–500 m to +5,000 m (–1,640.42 ft. to +16,404.20 ft.)
	ESD protection	● Air discharge: 4 kV ● Contact discharge: 4 kV
	Surge protection	● Service port: ±4 kV for common mode ● Power connector: ±2 kV for common mode and ±1 kV for differential mode
Certification and Regulatory Compliance	EMC	EN 55032 EN 61000-3-2 EN 61000-3-3 EN 55035 EN 300 386
	Safety compliance	EN 62638-1

	Certification	CE
Interface	EEE	Yes

Warning

Operation of this equipment in a residential environment could cause radio interference.

Product Appearance

On the front panel, the RG-ES205GC Ethernet switch provides five 10/100/1000Base-T Ethernet ports. On the back panel, it provides a DC power socket.

Figure 1-19 Appearance of the RG-ES205GC

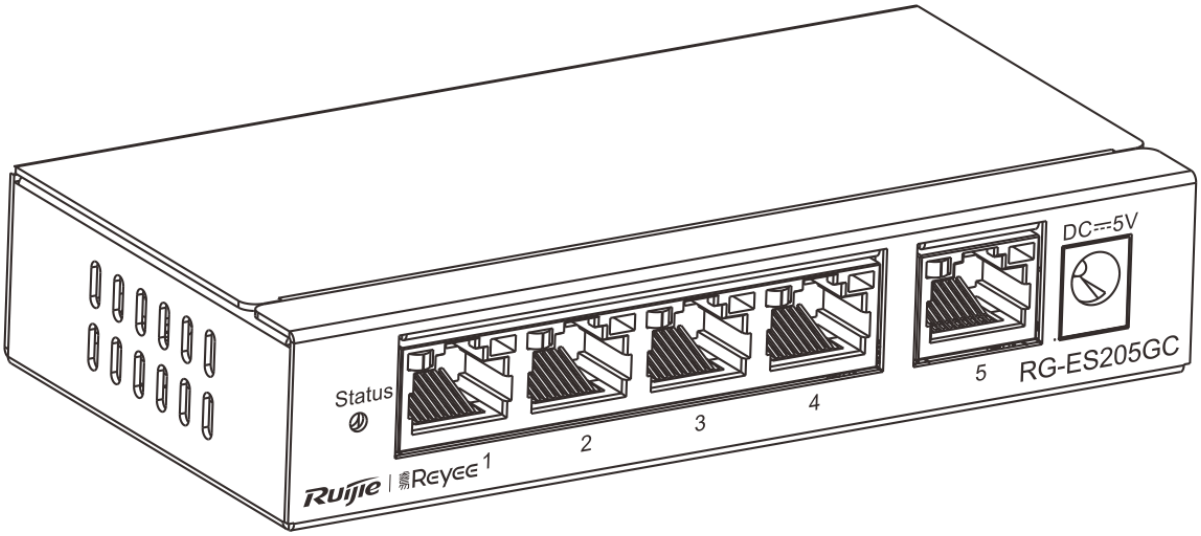

Front Panel

Figure 1-20 Front Panel of the RG-ES205GC

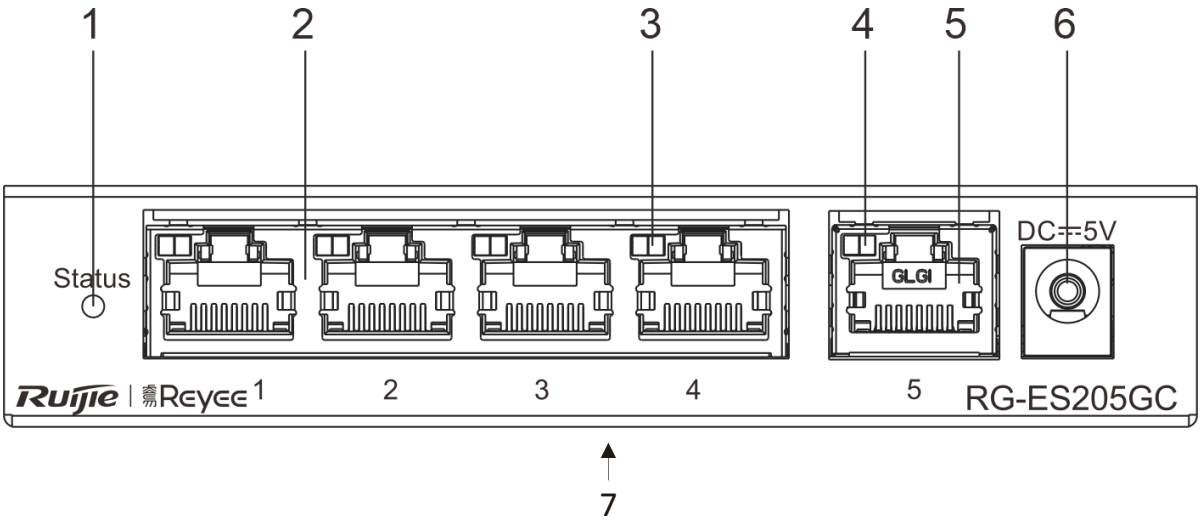

Note:	1. System status LED 2. 10/100/1000Base-T auto-sensing Ethernet port 3. Electrical port status LED	4. Electrical port status LED 5. 10/100/1000Base-T auto-sensing Ethernet port 6. DC power socket 7. Nameplate on the bottom of the device

Back Panel

Figure 1-21 Back Panel of the RG-ES205GC

Note:	1. Grounding pole	2. System reset button

Note

- The switch restarts after the reset button is pressed for less than 2 seconds.

- The switch restores the default factory settings after the reset button is pressed for more than 5 seconds (until the status LED blinks).

Heat Dissipation

The RG-ES205GC adopts natural heat dissipation, thereby ensuring normal operation. You must reserve 10 cm distance space at both sides and the back plane of the cabinet to allow airflow. It is recommended that you clean the device once every three months to avoid dust from blocking vents.

LEDs

LED	Panel Identification	State	Meaning
System status LED	Status	Off	The switch is not receiving power.
		Blinking green	The switch is being upgraded or initialized.
		Solid green	The switch is operational.
RJ45 port Link/Ack Status LED	1–5	Off	The port is not connected.
		Solid green	The port is connected at a rate of 10/100/1000 Mbps.
		Blinking green	The port is receiving or transmitting traffic at a rate of 10/100/1000 Mbps.

1.8 RG-ES208GC

Technical Specifications

System Specifications	Flash memory	4 MB
	Forwarding rate	11.9 Mpps
Port Specifications	Total number of RJ45 ports	8
	Number of 10/100/1000BASE-T ports	8
	Reset button	1
Power Supply and Consumption	Power input	DC adapter: ● Rated input voltage: 100 V AC to 240 V AC, 50 Hz to 60 Hz ● Maximum input voltage: 90 V AC to 264 V AC, 47 Hz to 63 Hz ● Rated input current: 0.3 A

		Output： ● Rated output voltage: 5 V DC ● Maximum output current: 1 A
	Maximum power consumption	5 W
	Power supply	DC power adapter
Dimensions and Weight	Casing	Metal
	Product dimensions (W x D x H)	160 mm x 75 mm x 24 mm (6.30 in. x 2.95 in. x 0.95 in.)
	Weight	● 0.49 kg (1.08 lbs) (without packaging materials) ● 0.65 kg (1.43 lbs) (with packaging materials)
System Specifications	Switching capacity	16 Gbps(bit/s)
Environment and Reliability	Fan	Fanless design
	Cooling	Natural cooling
	Mounting options	Wall/Desk
	Hot swapping of cables	Hot swapping supported by the service port and power connector
	MTBF	200,000 hours
	Operating temperature	0°C to 40°C (32°F to 104°F)
	Storage temperature	–40°C to +70°C (–40°F to +158°F)
	Operating humidity	10% RH to 90% RH (non-condensing)
	Storage humidity	5% RH to 95% RH (non-condensing)
	Altitude	–500 m to +5,000 m (–1,640.42 ft. to +16,404.20 ft.)
	ESD protection	● Air discharge: 4 kV ● Contact discharge: 4 kV
	Surge protection	● Service port: ±4 kV for common mode ● Power connector: ±2 kV for common mode and ±1 kV for differential mode
	Earth Leakage Current	≤ 1.5 mA
Certification and Regulatory Compliance	EMC	EN 55032 EN 61000-3-2

		EN 61000-3-3 EN 55035 EN 300 386
	Safety compliance	EN 62638-1
	Certification	CE
Interface	EEE	Yes

Warning

Operation of this equipment in a residential environment could cause radio interference.

Product Appearance

On the front panel, the RG-ES208GC Ethernet switch provides eight 10/100/1000Base-T Ethernet ports and a DC power socket.

Figure 1-22 Appearance of the RG-ES208GC

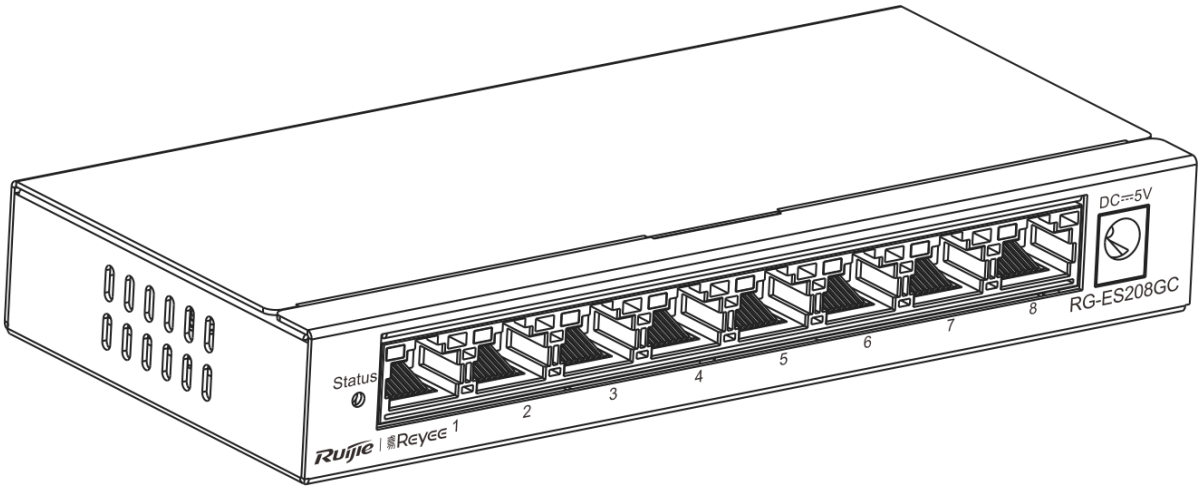

Front Panel

Figure 1-23 Front Panel of the RG-ES208GC

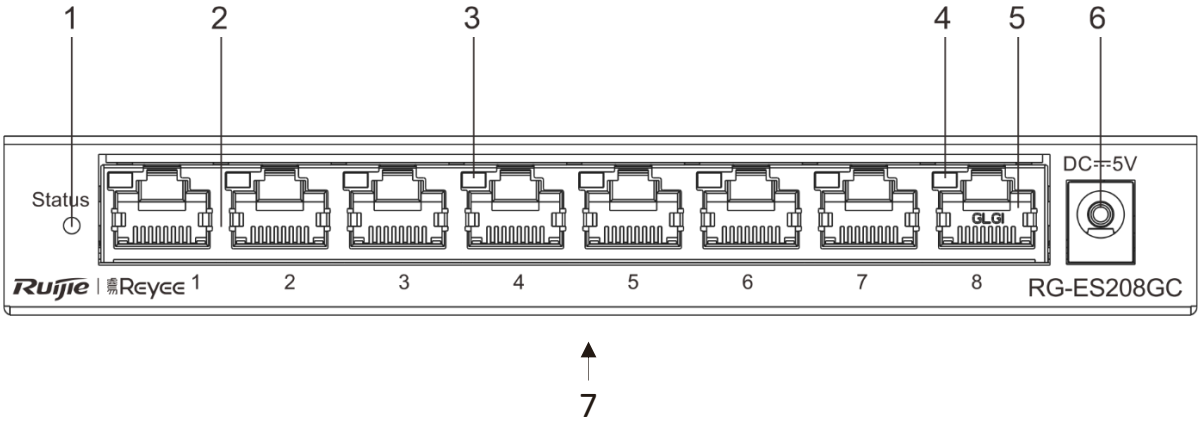

Note:	1. System status LED 2. 10/100/1000Base-T auto-sensing Ethernet port 3. Electrical port status LED	4. Electrical port status LED 5. 10/100/1000Base-T auto-sensing Ethernet port 6. DC power socket 7. Nameplate on the bottom of the device

Back Panel

Figure 1-24 Back Panel of the RG-ES208GC

Note:	1. Grounding pole	2. System reset button

Note

- The switch restarts after the reset button is pressed for less than 2 seconds.
- The switch restores the default factory settings after the reset button is pressed for more than 5 seconds (until the status LED blinks).

Heat Dissipation

The RG-ES208GC adopts natural heat dissipation, thereby ensuring normal operation. You must reserve 10 cm distance space at both sides and the back plane of the cabinet to allow airflow. It is recommended that you clean the device once every three months to avoid dust from blocking vents.

LEDs

LED	Panel Identification	State	Meaning
System status LED	Status	Off	The switch is not receiving power.
		Blinking green	The switch is being upgraded or initialized.
		Solid green	The switch is operational.
RJ45 port Link/Ack Status LED	1–8	Off	The port is not connected.
		Solid green	The port is connected at a rate of 10/100/1000 Mbps.
		Blinking green	The port is receiving or transmitting traffic at a rate of 10/100/1000 Mbps.

1.9 RG-ES206GC-P

Technical Specifications

Model	RG-ES206GC-P
Port	Six 10/100/1000 Base-T auto-sensing Ethernet ports. Ports 1–4 support PoE+/PoE.
Power Supply	● AC input Rated voltage range: 100 V to 240 V Maximum voltage range: 90 V to 264 V Frequency: 50/60 Hz Rated current: 1.5 A ● Adapter output Rated voltage range: 54 V DC Rated current range: 1.11 A
EEE	Not supported
PoE	PoE/PoE+ support

	Ports 1 to 4 support PoE/PoE+ with the maximum power output of 30 W per port. Ports 5 and 6 do not support PoE or PoE+. The overall maximum output power of PoE/PoE+ is 54 W.
PoE Power Pins	1 2+, 3 6-
Power Consumption	Less than 6 W with no PoE load Less than 60 W with PoE full load
Operating Temperature	0°C to 40°C (32°F to 104°F)
Storage Temperature	-40°C to +70°C (-40°F to +158°F)
Operating Humidity	10% to 90% RH (non-condensing)
Storage Humidity	5% to 95% RH (non-condensing)
Number of Fans	Fanless
Temperature Warning	Not supported
Accessing Optical Module Information	Not supported
Certification	CE;FCC
Earth Leakage Current	≤ 1.5 mA
Dimensions (W x D x H)	148 mm x 78 mm x 26 mm
Net Weight	0.308 kg

Warning

Operation of this equipment in a residential environment could cause radio interference.

Product Appearance

On the front panel, the RG-ES206GC-P Ethernet switch provides six 10/100/1000Base-T Ethernet ports. On the back panel, it provides a DC power socket.

Figure 1-25 Appearance of the RG-ES206GC-P

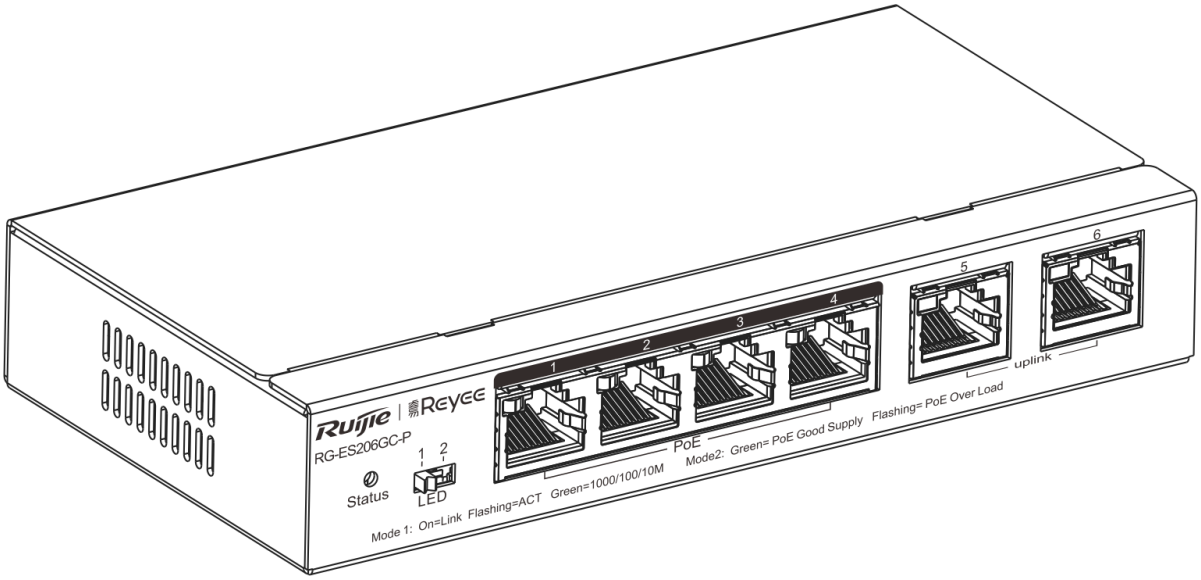

Front Panel

Figure 1-26 Front Panel of the RG-ES206GC-P

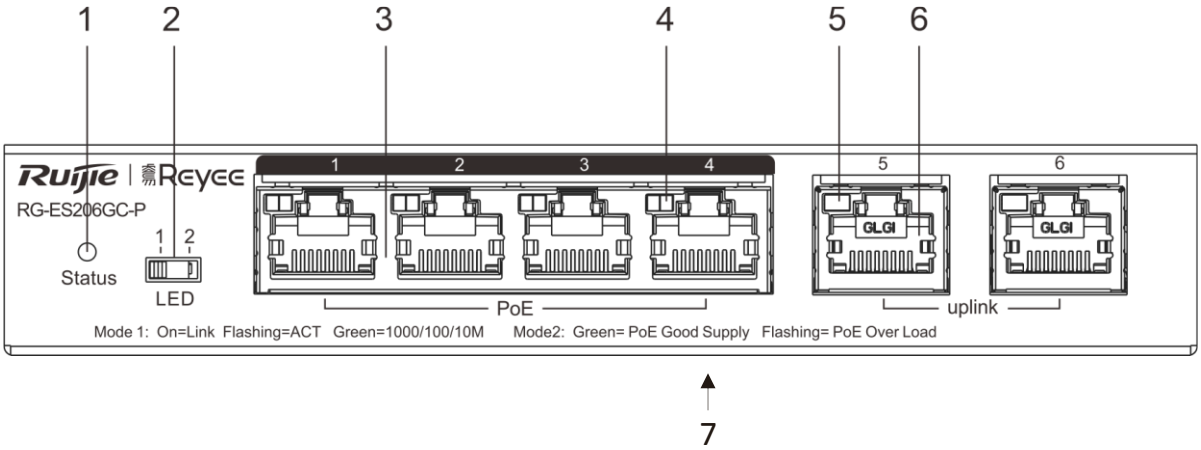

Note:	1. System status LED 2. Port mode switchover button 3. 10/100/1000Base-T auto-sensing Ethernet port	4. Electrical port status LED 5. Electrical port status LED 6. 10/100/1000Base-T auto-sensing Ethernet port 7. Nameplate on the bottom of the device

Note

- When the button is turned to the left position (Mode 1), the LED indicates the switching status of the port. When the LED is solid green, the link is Up. When the LED blinks green, data is being transmitted or received.

- When the button is turned to the right position (Mode 2), the LED indicates the PoE status of ports. When the LED is solid green, the PoE-supported ports are supplying power. When the LED blinks green, the power of the ports is overloaded.

Back Panel

Figure 1-27 Back Panel of the RG-ES206GC-P

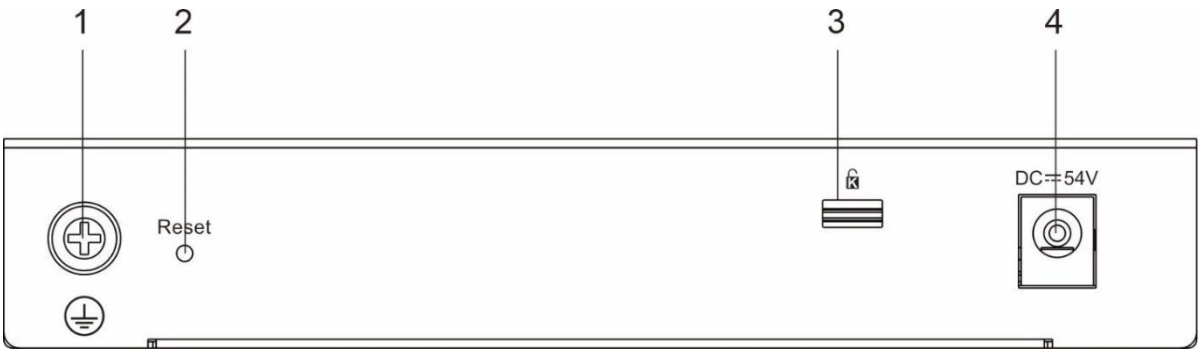

Note:	1. Grounding pole 2. System reset button	3. Hole for anti-theft lock 4. DC power socket

Note

- The switch restarts after the reset button is pressed for less than 2 seconds.
- The switch restores the default factory settings after the reset button is pressed for more than 5 seconds (until the status LED blinks).

Heat Dissipation

The RG-ES206GC-P adopts natural heat dissipation, thereby ensuring normal operation. You must reserve 10 cm distance space at both sides and the back plane of the cabinet to allow airflow. It is recommended that you clean the device once every three months to avoid dust from blocking vents.

LEDs

LED	Panel Identification	State	Meaning
System status LED	Status	Off	The switch is not receiving power.
		Blinking green	The PoE power exceeds the power of the entire device (54 W). The newly connected PD cannot be powered up due to insufficient power. The switching function is operational.
		Solid green	The switch is operational.

LED	Panel Identification	State	Meaning
RJ45 port PoE status LED	1–4	Off	PoE is not enabled.
		Solid green	PoE is enabled. The port is operational.
		Blinking green	PoE overload.
RJ45 port Link/Ack status LED	1-6	Off	The port is not connected.
		Solid green	The port is connected at a rate of 10/100/1000 Mbps.
		Blinking green	The port is receiving or transmitting traffic at a rate of 10/100/1000 Mbps.

1.10 RG-ES210GC-LP

Technical Specifications

Model	RG-ES210GC-LP
Port	Ten 10/100/1000 Base-T auto-sensing Ethernet ports. Ports 1–8 support PoE+/PoE.
Power Supply	● AC input Rated voltage range: 100 V to 240 V Maximum voltage range: 90 V to 264 V Frequency: 50/60 Hz Rated current: 1.5 A ● Adapter output Rated voltage range: 54 V DC Rated current range: 1.48A
EEE	Not supported
PoE	PoE/PoE+ support Ports 1 to 8 support PoE/PoE+ with the maximum power output of 30 W per port. Ports 9 and 10 do not support PoE or PoE+. The overall maximum output power of PoE/PoE+ is 70 W.
PoE Power Pins	1 2+, 3 6-
Power Consumption	Less than 10 W with no PoE load Less than 80 W with PoE full load

Operating Temperature	0°C to 40°C (32°F to 104°F)
Storage Temperature	-40°C to +70°C (-40°F to +158°F)
Operating Humidity	10% to 90% RH (non-condensing)
Storage Humidity	5% to 95% RH (non-condensing)
Number of Fans	Fanless
Temperature Warning	Not supported
Accessing Optical Module Information	Not supported
Certification	CE
Earth Leakage Current	≤ 1.5 mA
Dimensions (W x D x H)	202 mm x 108 mm x 28 mm
Net Weight	0.53 kg

Warning

Operation of this equipment in a residential environment could cause radio interference.

Product Appearance

On the front panel, the RG-ES210GC-LP Ethernet switch provides ten 10/100/1000Base-T Ethernet ports. On the back panel, it provides a DC power socket.

Figure 1-28 Appearance of the RG-ES210GC-LP

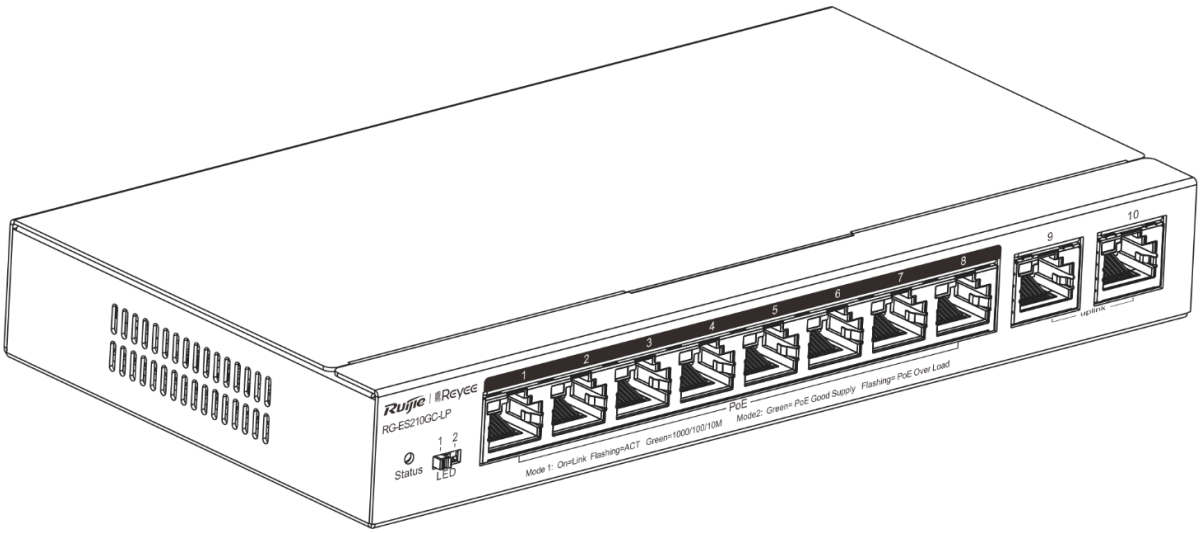

Front Panel

Figure 1-29 Front Panel of the RG-ES210GC-LP

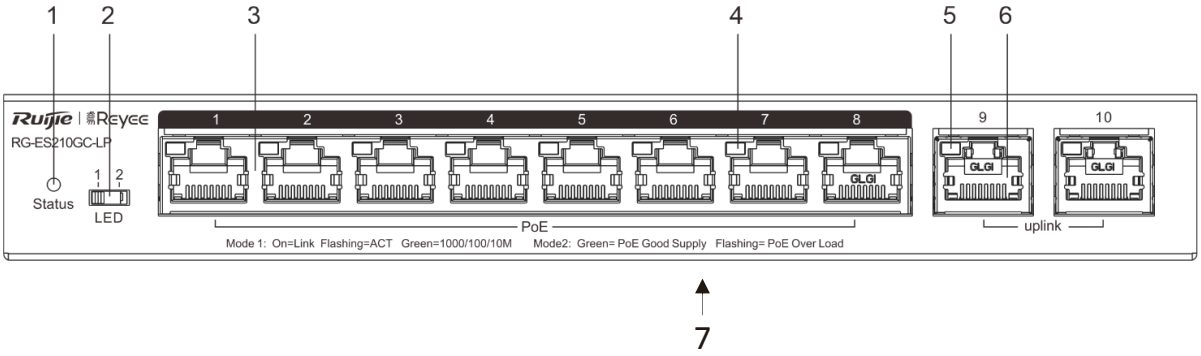

Note:	1. System status LED 2. Port mode switchover button 3. 10/100/1000Base-T auto-sensing Ethernet port	4. Electrical port status LED 5. Electrical port status LED 6. 10/100/1000Base-T auto-sensing Ethernet port 7. Nameplate on the bottom of the device

Note

- When the button is turned to the left position (Mode 1), the LED indicates the switching status of the port. When the LED is solid green, the link is Up. When the LED blinks green, data is being transmitted or received.
- When the button is turned to the right position (Mode 2), the LED indicates the PoE status of ports. When the LED is solid green, the PoE-supported ports are supplying power. When the LED blinks green, the power of the ports is overloaded.

Back Panel

Figure 1-30 Back Panel of the RG-ES210GC-LP

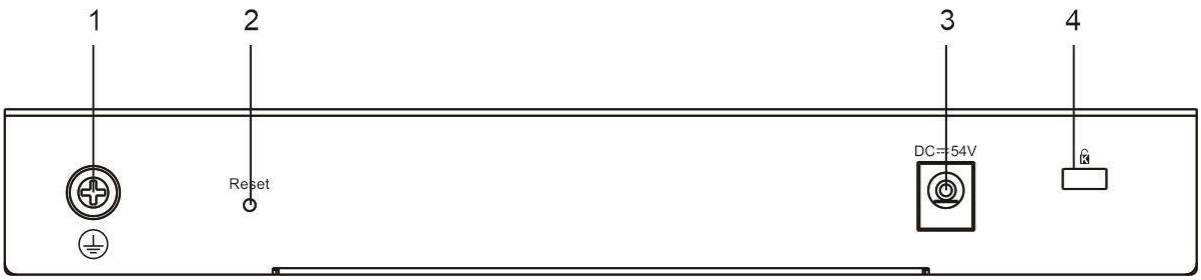

Note:	1. Grounding pole 2. System reset button	3. DC power socket 4. Hole for anti-theft lock

Note

- The switch restarts after the reset button is pressed for less than 2 seconds.
- The switch restores the default factory settings after the reset button is pressed for more than 5 seconds (until the status LED blinks).

Heat Dissipation

The RG-ES210GC-LP adopts natural heat dissipation, thereby ensuring normal operation. You must reserve 10 cm distance space at both sides and the back plane of the cabinet to allow airflow. It is recommended that you clean the device once every three months to avoid dust from blocking vents.

LEDs

LED	Panel Identification	State	Meaning
System status LED	Status	Off	The switch is not receiving power.
		Blinking green	The PoE power exceeds the power of the entire device (70 W). The newly connected PD cannot be powered up due to insufficient power. The switching function is operational.
		Solid green	The switch is operational.
RJ45 port PoE status LED	1–8	Off	PoE is not enabled.
		Solid green	PoE is enabled. The port is operational.
		Blinking green	PoE overload.
RJ45 port Link/Ack status LED	1–10	Off	The port is not connected.
		Solid green	The port is connected at a rate of 10/100/1000 Mbps.
		Blinking green	The port is receiving or transmitting traffic at a rate of 10/100/1000 Mbps.

2 Preparation Before Installation

2.1 Safety Suggestions

Caution

- To avoid personal injury and device damage, carefully read the safety suggestions before you install the RG-ES200 series switch.
- The following safety suggestions do not cover all possible dangers.

2.1.1 Installation

- Keep the chassis clean and free from any dust.
- Do not place the equipment in a walking area.
- Do not wear loose clothes or accessories that may be hooked or caught by the device during installation and maintenance.
- Turn off all power supplies and remove power sockets and cables before installing or uninstalling the device.

2.1.2 Movement

- Do not frequently move the device.
- When moving the device, note the balance and avoid hurting legs and feet or straining the back.
- Before moving the device, turn off all power supplies and dismantle all power modules.

2.1.3 Electricity

- Observe local regulations and specifications when performing electric operations. Relevant operators must be qualified.
- Before installing the device, carefully check any potential danger in the surroundings, such as ungrounded power supply, and damp or wet ground or floor.
- Before installing the device, find out the location of the emergency power supply switch in the room. First cut off the power supply in the case of an accident.
- Try to avoid maintaining the switch that is powered on alone.
- Be sure to make a careful check before you shut down the power supply.
- Do not place the device in a damp location. Do not let any liquid enter the chassis.

Caution

- Any nonstandard and inaccurate electric operation may cause an accident such as fire or electrical shock, thus causing severe even fatal damages to human bodies and the device.
- Direct or indirect touch through a wet object on high-voltage and mains supply may bring a fatal danger.
- If a power supply system is equipped with a leakage protector (leakage current switch or breaker), the rated leakage action current of each leakage protector is twice greater than the maximum leakage current of all the power supplies in the system. For example, if a system is equipped with twenty identical power supplies, the leakage current of each power supply is equal to or less than 1.5 mA, and the total leakage current of the system is 30 mA. A leakage protector with 30 mA rated action current supports

less than ten power supplies (that is, action current of the leakage protector/2/maximum leakage current of each power supply = 30/2/1.5 = 10). In other words, the leakage protector with 30 mA rated action current supports no more than ten power supplies. In this case, the twenty power supplies in the system require at least two leakage protectors with 30 mA rated action current and each leakage protector supports ten power supplies. If power supplies in a system differ in models, the rated leakage action current of each leakage protector divided by two is greater than the sum of maximum leakage current of all the power supplies. The rated leakage non-action current of a leakage protector must be 50% of the leakage action current. The leakage protector with 30 mA rated leakage action current is used as an example. The rated leakage non-action current must be 15 mA. When the leakage current falls below 15 mA, the protector should not act. Otherwise, misoperation may easily occur due to high sensitivity and thus the leakage protector trips, devices are powered off, and services are interrupted.

- To guarantee personal safety, the rated leakage action current of each leakage protector in the system must be equal to or less than 30 mA (human body safety current is 30 mA). When twice of the total leakage current of the system is greater than 30 mA, the system must be equipped with two or more leakage protectors.
- For details of the leakage current value of each power supply model, see Chapter 1 Product Overview.

2.1.4 Static Discharge Damage Prevention

To prevent damage from static electricity, pay attention to the following points:

- Proper grounding of grounding screws on the back panel of the device
- Indoor dust prevention
- Proper humidity conditions

2.1.5 Laser

The RG-ES226GC-P and RG-ES218GC-P switch with an optical port usually supports multiple types of optical transceivers, all of which are Class I laser products. Pay attention to the following during the use of optical transceivers:

- When an optical transceiver is in operation, ensure that its port is connected to an optical fiber or covered by a dust cap to keep out dust and prevent it from burning your eyes.
- When an optical transceiver is in operation, do not look into its port after removing the optical fiber. Doing so may result in eye injury.

Figure 2-1 Laser Product Warning

Warning

Do not approach or look directly into any optical port under any circumstances. This may cause permanent damage to your eyes.

2.2 Installation Site Requirements

The installation site must meet the following requirement to ensure normal working and a prolonged durable life of the switch.

2.2.1 Ventilation

For the RG-ES200 series, a sufficient space (at least 10 cm distances from both sides and the back plane of the cabinet) should be reserved at the ventilation openings to ensure the normal ventilation. After various cables have been connected, they should be arranged into bundles or placed on the cabling rack to avoid blocking the air inlets. It is recommended to clean the switch at regular intervals (like once every three months). Especially, avoid dust from blocking the screen mesh on the back of the cabinet.

2.2.2 Temperature and Humidity

To ensure the normal operation and prolong the service life of RG-ES200 series switch, keep proper temperature and humidity in the equipment room.

If the temperature and humidity in the equipment room do not meet requirements for a long period of time, the device may be damaged

- In an environment with a high humidity, insulating materials may have bad insulation or even leaking electricity. Sometimes the materials may suffer from mechanical performance change and metallic parts may get rusted.
- In an environment with a low humidity, insulating strips may dry and shrink. Static electricity may occur easily and endanger circuits on the device.
- In an environment with a high temperature, the router is subject to more serious harm. Its performance may degrade significantly and various hardware faults may occur.

The ambient temperature and humidity of the RG-ES200 series switch must meet the requirements listed in Table 2-1:

Table 2-1 Temperature and Humidity Requirements of the RG-ES200 Series Switch

Temperature	Relative Humidity
0°C to 40°C (32°F to 104°F)	10% to 90%

Note

The requirements for the sampling site of the temperature and humidity in the operating environment of the device are as follows:

Caution

- There is no protective plate at the front or back of the rack.
- The vertical height is 1.5 m above the floor.
- The distance from the front panel of the device is 0.4 m.

2.2.3 Cleanness

Dust poses a severe threat to the running of the device. The indoor dust falling on the device may be absorbed by the static electricity, causing bad contact of the metallic joint. Such electrostatic absorption may occur more easily when the relative humidity is low. This affects the device lifecycle and causes communication faults. Table 2-2 lists the requirements for the dust content and granularity in the equipment room.

Table 2-2 Requirements for the Dust Content and Granularity in the Equipment Room

Dust	Unit	Density
Diameter ≥ 0.5 μm	Particles/m^3	≤ 3.5 x 10^6
Diameter ≥ 5 μm	Particles/m^3	≤ 3 x 10^4

Apart from dust, the salt, acid, and sulfide in the air in the equipment room must also meet strict requirements. This is because such poisonous substances may accelerate the corrosion of the metal and the aging of some parts. The equipment room should be protected from the intrusion of harmful gases such as sulfur dioxide, sulfured hydrogen, nitrogen dioxide, and chlorine. Table 2-3 lists the requirements.

Table 2-3 Requirements for Harmful Gases in the Equipment Room

Gas	Average (mg/m^3)	Maximum (mg/m^3)
SO_2	0.3	1.0
H_2S	0.1	0.5
NO_2	0.5	1.0
Cl_2	0.1	0.3

Note

The average and maximum values are measured for a week. The switch cannot be placed in the environment with the maximum density for over 30 minutes every day.

2.2.4 Interference Resistance

The switch is vulnerable to external interface caused by capacity coupling, inductance coupling, electromagnetic wave radiation, common impedance (including grounding system) coupling, and conducting wires (including power cords, signal and output wires). Therefore, note the following points:

- The AC power supplying system is the TN system. The single-phase three-wire socket with protecting grounding must be used as the socket for the power supply to enable the device's upper filter circuit to effective filter the power interface.
- The switch should be far from high-power radio transmitting stations, radar stations and high-frequency and large-current devices.
- Electromagnetic shielding methods should be applied when necessary, such as using the shielded cable as the interface cable.
- Cables must be connected to interfaces inside the room to prevent damage to the device's signal ports caused by over-voltage and over-current generated by thunder and lightning.

2.2.5 Grounding

A good grounding system is the basis for stable and reliable operation of the device, preventing lightning strokes and resisting interference. Carefully check the grounding conditions at the installation site according to the grounding requirements, and perform grounding operations properly as required.

Caution

- Effective grounding of the switch guarantees surge protection and interference resistance. Therefore, connect the grounding line of the switch properly.
- The grounding cable is prepared by customers.

Safety Grounding

The device using AC power supply must be grounded by using the yellow/green safety grounding cable. Otherwise, when the insulating resistance decreases the power supply and the enclosure in the equipment, electric shock may occur.

Caution

- The building must provide the protective grounding connection to ensure that the device is connected to the protection location.
- The installation and maintenance personnel must check whether the A.C. socket is well connected to the protection location of the building. If not, use a protective grounding wire to connect the grounding end of the A.C. socket to the building's protection location.
- The power supply socket must be installed in a place that is near to the device and where users can operate the device easily.
- Before device installation, ensure that the ground is connected at first and disconnected finally.
- The sectional area of the protective grounding wire should be at least 0.75 mm^2 (18 AWG).
- Use the 3-core power supply line. The sectional area of each pin should be at least 0.75 mm^2 or 18 AWG.

Lightning Grounding

The surge protection system of a facility is an independent system that consists of the lightning rod, down conductor, and connector to the grounding system, which usually shares the power reference ground and ground cable. The lightning discharge ground is targeted for the facility.

EMC Grounding

The grounding required for EMC design includes the shielding ground, filter ground, noise and interference suppression, and level reference. All the above constitute the comprehensive grounding requirements. The

resistance of earth wires should be less than 1 Ω. The RG-ES200 series switch back plane is reserved with one grounding pole, as shown in Figure 2-1.

Figure 2-2 Grounding of the RG-ES200

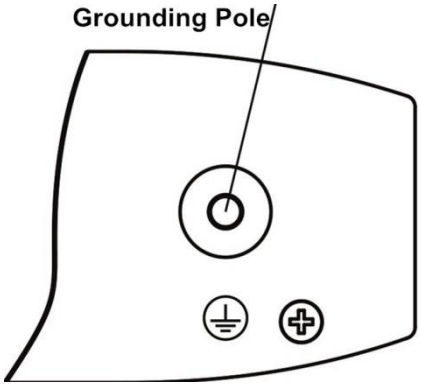

2.2.6 Lightning Resistance

When the AC power cable is imported outdoors and directly connected to the power port of the RG-ES200 series switch, use the lightning line bank to prevent the switch from being hit by lightning shocks. In this case, connect the mains supply AC cable to the lightning line bank, and connect the switch to the lightning line bank. This helps prevent the current of high-voltage lightning from passing the switch directly through the mains supply cable to a certain extent.

Note

The lightning line banks are not provided and should be purchased by customers as required.

2.2.7 EMI

Electro-Magnetic Interference (EMI), from either outside or inside the device or application system, affects the system in the conductive ways such as capacitive coupling, inductive coupling, and electromagnetic radiation.

There are two types of electromagnetic interference: radiated interference and conducted interference, depending on the type of the transmission path.

When the energy, often RF energy, from a component arrives at a sensitive component through the space, the energy is known as radiated interference. The interference source can be either a part of the interfered system or a completely electrically isolated unit. Conducted interference results from an electromagnetic wire or signal cable connection between the source and the sensitive component, along which cable the interference conducts from one unit to another. Conducted interference often affects the power supply of the device, but can be controlled by a filter. Radiated interference may affect any signal path in the device and is difficult to shield.

- For the TN AC power supply system, the single-phase three-core power socket with protective earthing conductors (PE) should be adopted to effectively filter out interference from the power grid through filtering circuits.
- Do not use the grounding device for an electrical device or anti-lightning grounding device. In addition, the grounding device of the device must be deployed far away from the grounding device of the electrical device and anti-lightning grounding device.

- Keep the device away from the high-power radio transmitter, radar transmitting station, and high-frequency large-current device.
- Take measures to shield static electricity.
- Lay interface cables inside the equipment room. Outdoor cabling is prohibited, avoiding damages to device signal interfaces caused by over-voltage or over-current of lightning.

2.3 Installation Tools

Table 2-4 List of Installation Tools

Common Tools	Phillips screwdriver, flathead screwdriver, related electric cables and optical cables, bolts, diagonal pliers, and straps
Special Tools	Anti-static tools
Meters	Multimeter

Note

The tool kit is customer-supplied.

3 Product Installation

3.1 Installation Flowchart

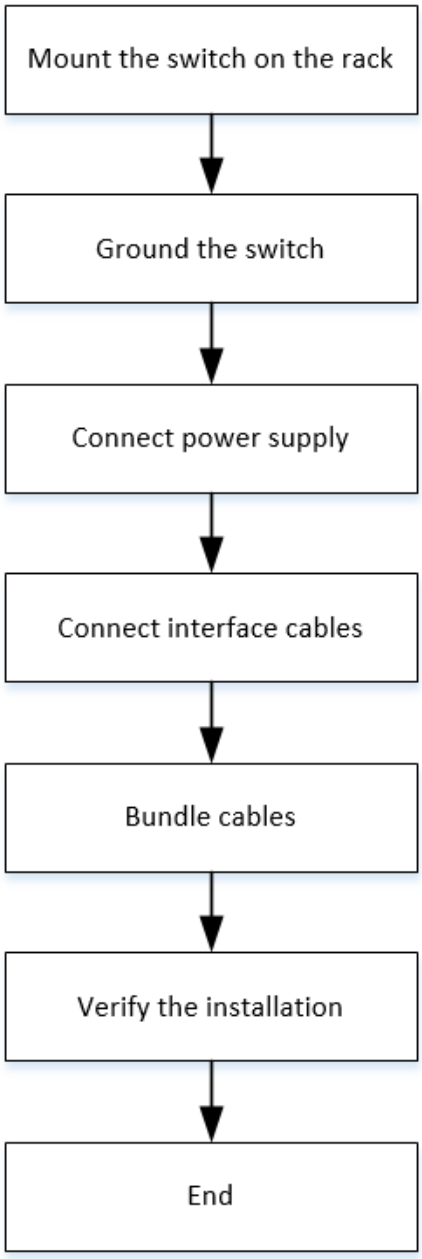

3.2 Confirmations Before Installation

Before installation, confirm the following points:

- Check whether ventilation requirements are met for the switch.

- Check whether the requirements of temperature and humidity are met for the switch.
- Check whether power cables are already laid out and whether the requirements of electrical current are met.
- Check whether related network adaption lines are already laid out.

3.3 Installing the RG-ES200

Precautions

During installation, note the following points:

- Connect the power cables of different colors to the corresponding grounding posts.
- Ensure that the interface of the power supply cable is properly connected to the power interface of the device. The power cables must be protected using power cable retention clips after they are connected to the device.
- Do not place any articles on the RG-ES200 series switch.
- Reserve a spacing of at least 10 cm around the chassis for good ventilation. Do not stack the devices.
- The switch should be located at places free from the large power radio launch pad, radar launch pad, and high-frequency large-current devices. If necessary, use electromagnetic shielding. For example, use interface cables to shield cables.
- 100-meter network cables should be laid inside the equipment room and outdoor cabling of such cables is prohibited. If outdoor cabling is necessary, take relevant measures for surge protection.

3.3.1 Mounting the Switch to a Standard 19-inch Rack

The RG-ES205GC-P, RG-ES209GC-P, RG-ES205GC, RG-ES208GC, RG-ES206GC-P, and RG-ES210GC-LP series switches do not support rack mounting.

The RG-ES218GC-P, RG-ES226GC-P, RG-ES224GC, and RG-ES216GC series switches follow the EIA standard dimensions and can be installed in the 19-inch rack.

Step 1: Attach the mounting brackets to the switch with the supplied screws, as shown in Figure 3-1.

Figure 3-1 Attaching the Mounting Bracket to the RG-ES218GC-P

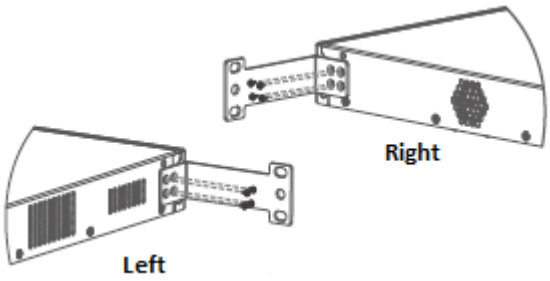

Figure 3-2 Attaching the Mounting Bracket to the RG-ES226GC-P

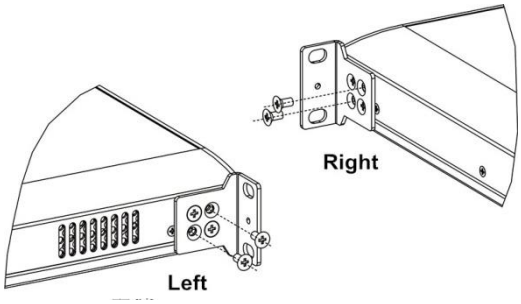

Figure 3-3 Attaching the Mounting Bracket to the RG-ES224GC or RG-ES216GC

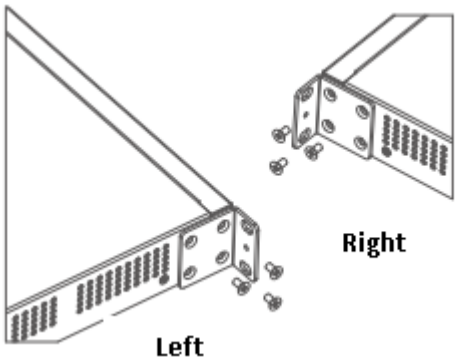

Step 2: Use the supplied M6 screws and cage nuts to securely attach the mounting brackets to the rack, as shown in Figure 3-4 and Figure 3-5.

Figure 3-4 Attaching the Brackets to the Rack

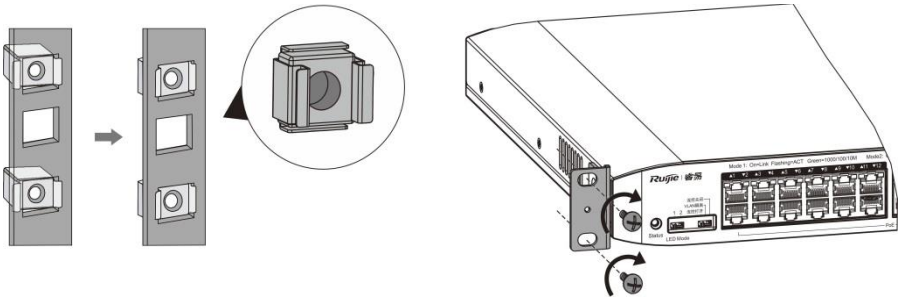

Figure 3-5 Attaching the Brackets to the Rack

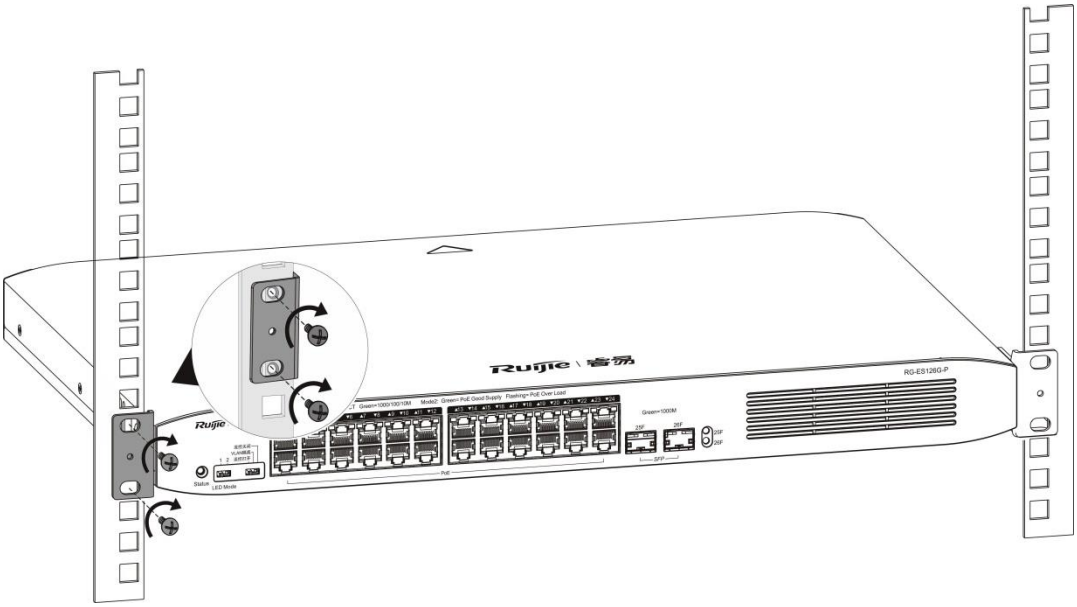

3.3.2 Mounting the Switch Against a Wall

The RG-ES209GC-P, RG-ES205GC, RG-ES208GC, RG-ES206GC-P, and RG-ES210GC-LP can be mounted against the wall. Mounting screws and wall anchors are customer-supplied.

You need to determine the size and depth of the two mounting holes on the wall based on the sizes of wall anchors and screws. Ensure that the wall anchors can be inserted into the holes. The outer edges of the wall anchors are left outside the wall, so screws can be tightly fastened to the wall.

The RG-ES209GC-P is used as an example. The steps of mounting the switch on the wall are as follows:

(1) Step 1: As shown in Figure 3-6, drill two holes with the diameter of about 5 mm on the wall, ensure that the spacing of the two holes is 112 mm and the line of connecting the two holes is horizontal.

(2) Step 2: Insert wall anchors into the holes and ensure that the outer edges of the wall anchors are aligned with the wall.

(3) Step 3: Put two M4 screws into the wall anchors. Ensure that the distance between the inner side of the screw head and the outer edge of the wall anchors not be smaller than 2.5 mm so that the device can be securely mounted on the screws.

(4) Step 4: Align the two mounting holes on the bottom of the chassis of the device with the screws, and then fasten the device on the screws.

Figure 3-6 Mounting the Switch Against the Wall

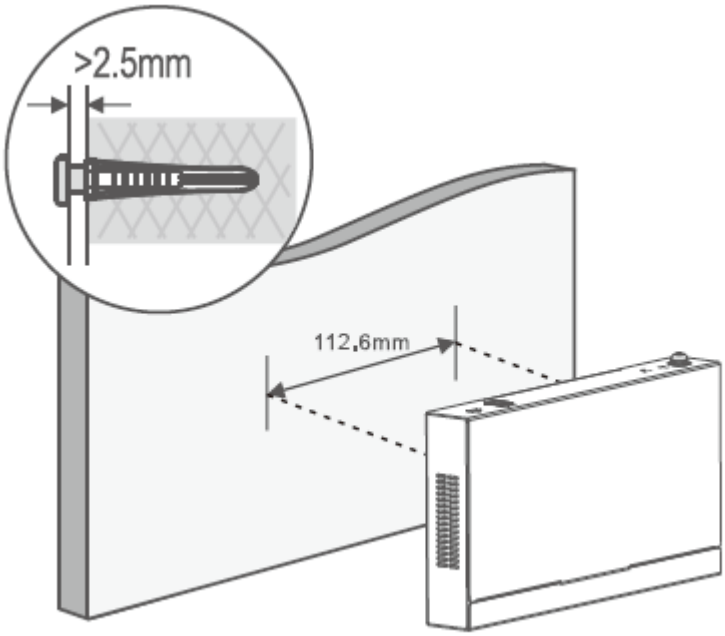

Caution

It is suitable for mounting on the concrete or non-combustible surface only.

3.3.3 Mounting the Switch on a Table

Attach the four rubber pads to the recessed areas on the bottom of the switch, as shown in Figure 3-7 and Figure 3-8.

Figure 3-7 Attaching the Rubber Feet to the Recessed Areas

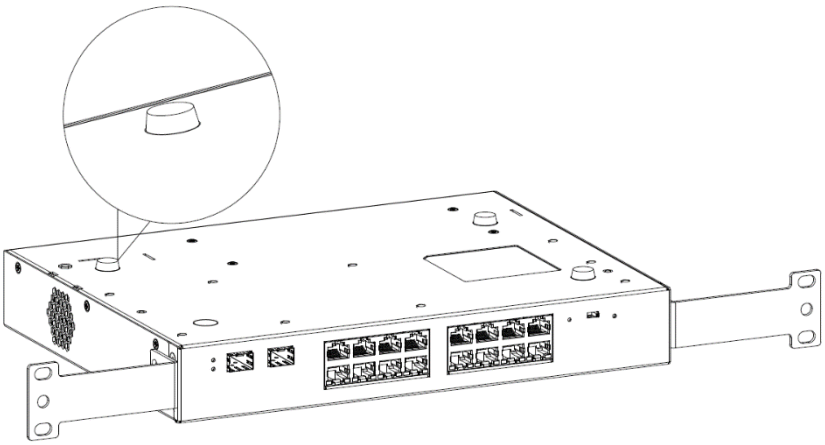

Figure 3-8 Attaching the Rubber Pads to the Recessed Areas

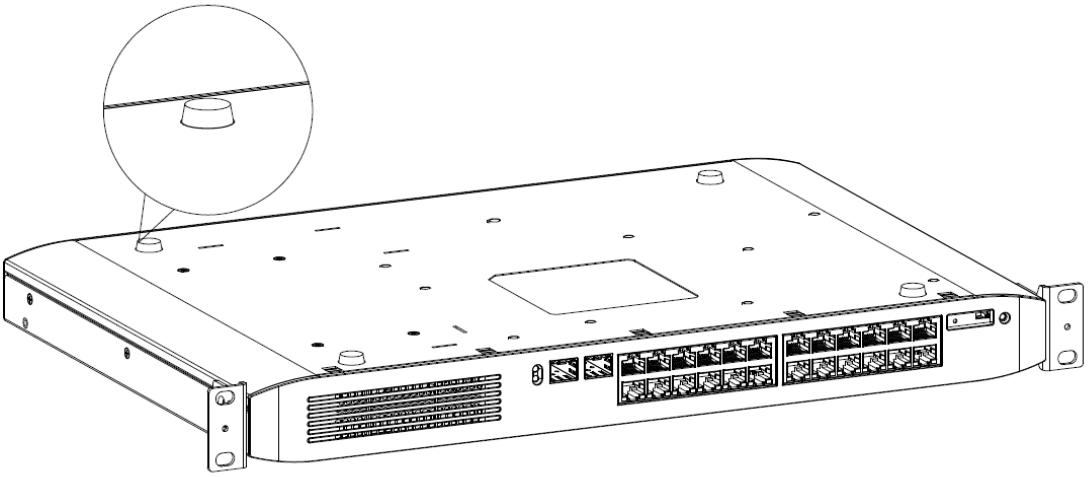

Place the switch on the table, as shown in Figure 3-9 and Figure 3-10.

Figure 3-9 Mounting the Switch on the Table

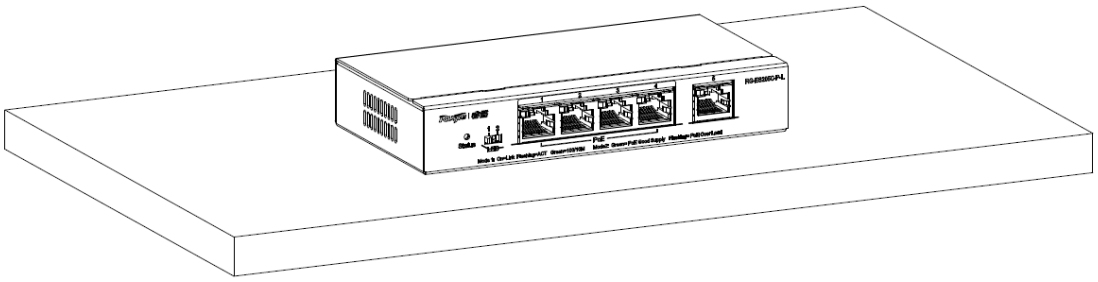

Figure 3-10 Mounting the Switch on the Table

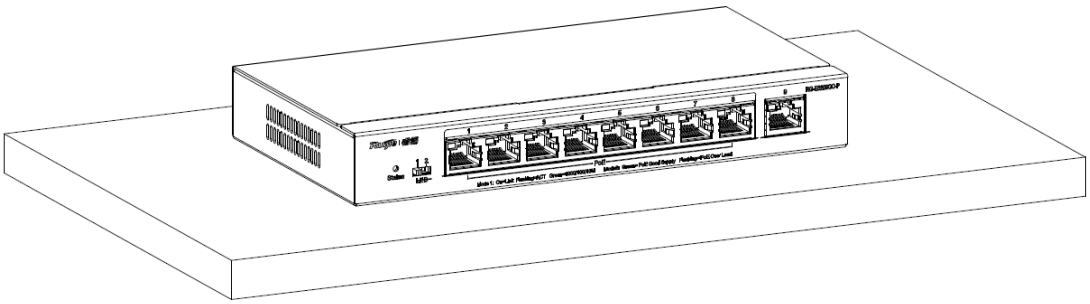

Caution

The device must be installed and operated in the place that can restrict its movement.

3.4 Checking After Installation

Caution

Before checking the installation, switch off the power supply so as to avoid any personal injury or damage to the component due to connection errors.

- Check that the ground line is connected.
- Check that the cables and power input cables are correctly connected.
- Check that all interface cables are laid out inside the equipment room. In the case of external cabling, check that the lightning resistance socket or network interface lightning protector is connected.
- Check that sufficient airflow is available around the device (over 10 cm).

4 System Check

4.1 Startup Check

4.1.1 Checking Before the Device Is Powered On

- The switch is well grounded.
- The power cable is correctly connected.

- The power supply voltage complies with the requirement of the switch.

4.1.2 Checking After Program Startup (Recommended)

After power-on, you are advised to perform the following checks to ensure the normal operation of follow-up configurations.

- Check whether the status of the switch indicator is normal.
- Check whether the service interface forwards data normally.

5 Maintenance and Troubleshooting

5.1 Troubleshooting Procedure

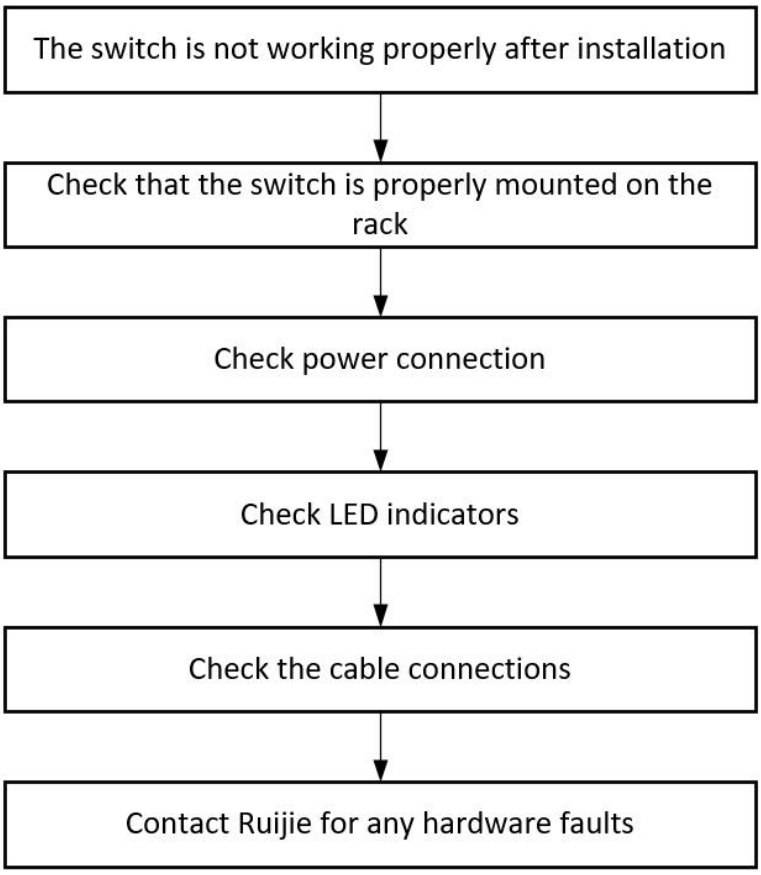

5.2 Troubleshooting Common Faults

Symptom	Possible Causes	Solution
The management interface login	A password is manually configured but it is forgotten.	Contact Ruijie Networks Customer Service Department for technical support.

Symptom	Possible Causes	Solution
password is forgotten.		
The RJ45 port is not connected or an error occurs when the port is receiving or transmitting frames.	The connected twisted pair cable is faulty. The length of the cable exceeds 100 m. The port has special configuration, which does not adapt to the working mode of the connected switch.	Replace the twisted pair cable. Check that the working mode of the port must adapt to that of the connected switch.
The optical port cannot be connected.	The Rx and Tx ends are connected reversely. The interconnected optical module type does not match. The fiber type is incorrect. The length of the optical module exceeds the rated value.	Switch the Rx and Tx ends of the optical module. Replace the optical module with one of the matched type. Replace the optical module with one of the appropriate type. Replace the optical module with one of the appropriate length.

6 Appendix A Connectors and Connection Media

1000BASE-T/100BASE-TX/10BASE-T Ports

The 1000BASE-T/100BASE-TX/10BASE-T supports adaptation of three rates and automatic MDI/MDIX crossover at these three rates.

The 1000BASE-T complies with IEEE 802.3ab, and uses the cable of 100-ohm Category-5 or Supper Category-5 UTP or STP, which can be up to 100 m.

The 1000BASE-T port uses four pairs of wires for transmission, all of which must be connected. Figure 6-1 shows the connections of the twisted pairs used by the 1000BASE-T port.

Figure 6-1 Four Twisted Pairs of the 1000BASE-T

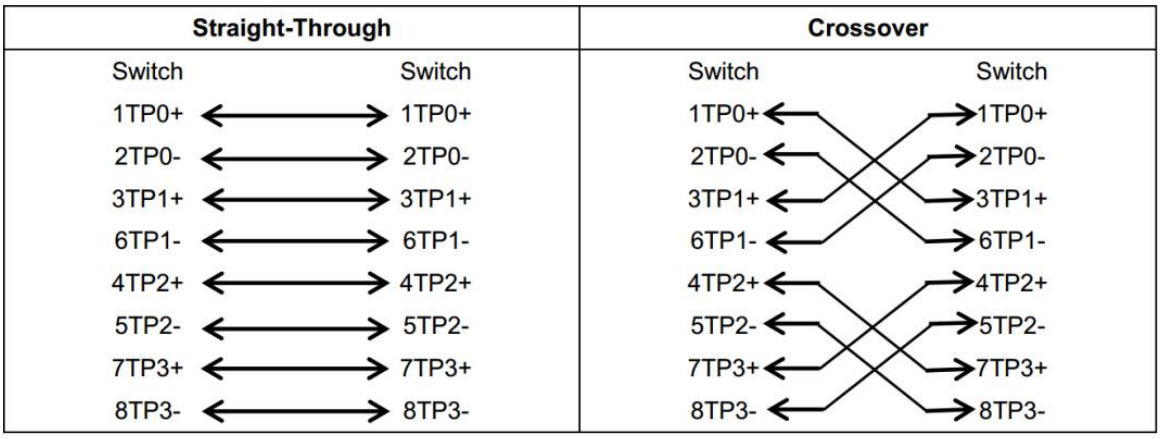

In addition to the preceding cables, the 100BASE-TX/10BASE-T can also use 100-ohm Category-3, Category-4, and Category-5 cables for 10 Mbps, and 100-ohm Category-5 cables for 100 Mbps, both of which can be up to 100 m. Figure 6-2 shows the pinouts of the 100BASE-TX/10BASE-T.

Figure 6-2 Pinouts of the 100BASE-TX/10BASE-T

Pin	Socket	Plug
1	Input Receive Data+	Output Transmit Data+
2	Input Receive Data-	Output Transmit Data-
3	Output Transmit Data+	Input Receive Data+
6	Output Transmit Data-	Input Receive Data-
4,5,7,8	Not used	Not used

Figure 6-3 shows the straight-through and crossover cable connections for the 100BASE-TX/10BASE-T.

Figure 6-3 Connections of the Twisted Pairs of the 100BASE-TX/10BASE-T

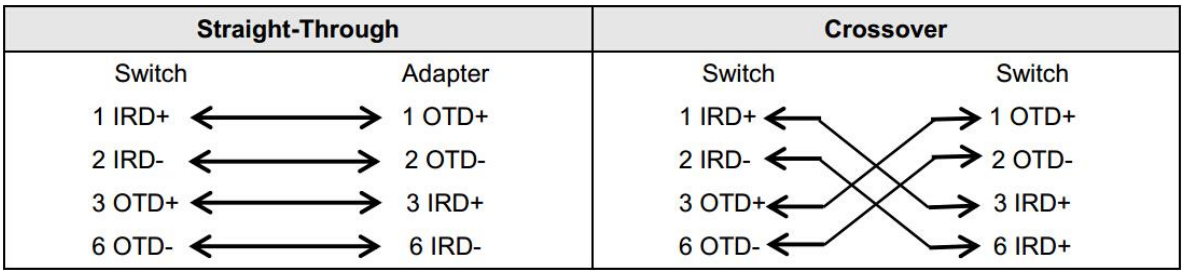

Optical Fiber Connection

For the optical fiber ports, select single-mode or multimode optical fibers for connections according to the optical module connected. Figure 6-4 shows the connection schematic diagram.

Figure 6-4 Optical Fiber Connections

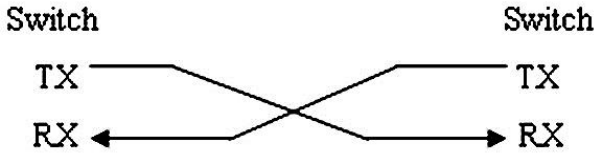

7 Appendix B Mini-GBIC and SFP+ Module

SFP modules (mini-GBIC module) and 10G SFP+ modules are available to cope with interface types of switch modules. You can select the mini-GBIC module to suit your specific needs. The models and technical specifications of some mini-GBIC and 10G SFP+ modules are listed below. For details, see *Ruijie Transceiver Installation and Reference Guide.*

Table 7-1 Models and Technical Specifications of the 1000M Mini-GBIC (SFP) Module

Model	Wave Length (nm)	Media Type	DDM (Yes/No)	Intensity of Transmitted Light (dBm)		Intensity of Received Light (dBm)	
				Min	Max	Min	Max
Mini-GBIC-SX	850	MMF	No	-9.5	-3	-17	0
Mini-GBIC-LX	1310	SMF	No	-9.5	-3	-20	-3
GE-eSFP-SX-MM850	850	MMF	Yes	-9.5	-3	-17	0
GE-eSFP-LX-SM1310	1310	SMF	Yes	-9.5	-3	-20	-3
GE-SFP-LX-SM1310	1310	SMF	No	-9.5	-3	-20	-3
Mini-GBIC-LH40	1310	SMF	Yes	-2	3	-22	-3
GE-SFP-SX-SM1310-BIDI	1310	MMF	No	-10	-5	-17	-3
GE-SFP-SX-SM1550-BIDI	1550	MMF	No	-10	-5	-17	-3
GE-SFP-LX20-SM1310-BIDI	1310TX/ 1550RX	SMF	Yes	-9	-3	-20	-3
GE-SFP-LX20-SM1550-BIDI	1550TX/ 1310RX	SMF	Yes	-9	-3	-20	-3
GE-SFP-LH40-SM1310-BIDI	1310TX/ 1550RX	SMF	Yes	-5	0	-24	-1

Model	Wave Length (nm)	Media Type	DDM (Yes/No)	Intensity of Transmitted Light (dBm)		Intensity of Received Light (dBm)	
				Min	Max	Min	Max
GE-SFP-LH40-SM1550-BIDI	1550TX/ 1310RX	SMF	Yes	-5	0	-24	-1
Mini-GBIC-ZX50	1550	SMF	Yes	-5	0	-22	-3
Mini-GBIC-ZX80	1550	SMF	Yes	0	4.7	-22	-3
Mini-GBIC-ZX100	1550	SMF	Yes	0	5	-30	-9
GE-SFP-SX	850	MMF	No	-9.5	-3	-17	0
GE-SFP-LX	1310	SMF	No	-9.5	-3	-20	-3
SFP-MM850	850	MMF	No	-9.5	-3	-17	0
SFP-SM1310	1310	SMF	No	-9.5	-3	-20	-3

Table 7-2 Models of 1000M SFP Copper Module

Standard	Model	DDM (Yes/No)
1000Base-T	Mini-GBIC-GT	No

Table 7-3 Module Cabling Specification

Model	Interface Type	Fiber Type	Core Size (μm)	Cable Distance (Max.)
Mini-GBIC-SX-MM850	LC	MMF	62.5/125	275 m
			50/125	550 m
Mini-GBIC-LX-SM1310	LC	SMF	9/125	10 km
GE-eSFP-SX-MM850	LC	MMF	62.5/125	275 m
			50/125	550 m
GE-eSFP-LX-SM1310	LC	SMF	9/125	10 km
GE-SFP-LX-SM1310	LC	SMF	9/125	10 km
Mini-GBIC-LH40-SM1310	LC	SMF	9/125	40 km
GE-SFP-SX-SM1310-BIDI	LC	MMF	50/125	500 m

Model	Interface Type	Fiber Type	Core Size (μm)	Cable Distance (Max.)
GE-SFP-SX-SM1550-BIDI	LC	MMF	50/125	500 m
GE-SFP-LX20-SM1310-BIDI	LC	SMF	9/125	20 km
GE-SFP-LX20-SM1550-BIDI	LC	SMF	9/125	20 km
GE-SFP-LH40-SM1310-BIDI	LC	SMF	9/125	40 km
GE-SFP-LH40-SM1550-BIDI	LC	SMF	9/125	40 km
MINI-GBIC-ZX50-SM1550	LC	SMF	9/125	50 km
MINI-GBIC-ZX80-SM1550	LC	SMF	9/125	80 km
MINI-GBIC-ZX100-SM1550	LC	SMF	9/125	100 km
GE-SFP-SX	LC	MMF	62.5/125	275 m
			50/125	550 m
GE-SFP-LX	LC	SMF	9/125	10 km
Mini-GBIC-GT	RJ45	Category 5 (or above) UTP or STP		100 m

Caution

- For the optical module with the transmission distance exceeding 40 km or above, add one online optical attenuator on the link to avoid the overload of the optical receiver when short single-mode optical fibers are used.
- Optical modules generate laser. Do not look directly into the optical module.
- To keep optical modules clean, use dust caps when the modules are not connected to cables.
- No extra cables are needed when SFP cables are used. To allow two ports to communicate easily, install the two ends of a SFP cable into corresponding ports.

Table 7-4 Specifications of SFP BIDI Optical Module Pairs

Rate/Distance	Module Pairs
1000 Mbps/500 m	GE-SFP-SX-SM1310-BIDI GE-SFP-SX-SM1550-BIDI
1000 Mbps/20 km	GE-SFP-LX20-SM1310-BIDI GE-SFP-LX20-SM1550-BIDI
1000 Mbps/40 km	GE-SFP-LH40-SM1310-BIDI GE-SFP-LH40-SM1550-BIDI

Caution

The BIDI modules must be used in pairs, for example, FE-SFP-LX20-SM1310-BIDI and FE-SFP-LX20-SM1550-BIDI are used together.

8 Appendix C Surge Protection

Installing the AC Power Arrester (Surge Protection Cable Row)

The external surge protection cable row must be used on the AC power port to prevent the switch from being struck by lightning when the AC power cable is introduced from the outdoor and directly connected to the power port of the switch. The surge protection cable row is fixed on the cabinet, operating table, or the wall in the equipment room using the line buttons and screws.

Figure 8-1 Schematic Diagram for the Power Arrester

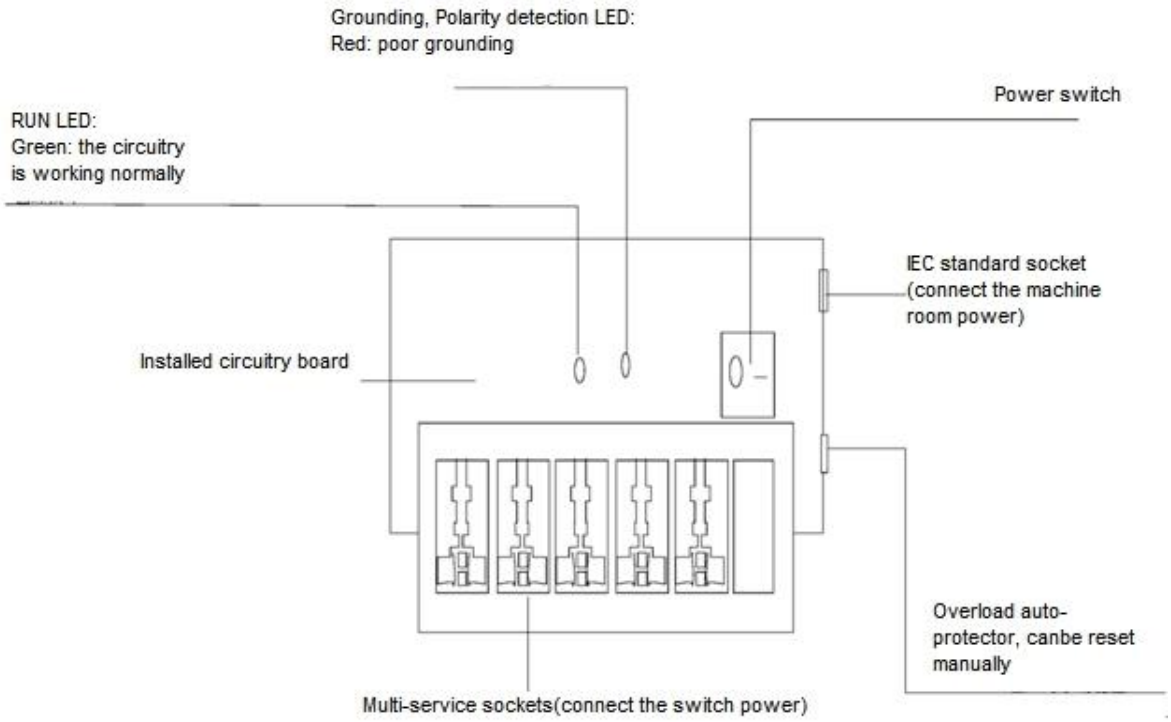

Note

The power arrester is not provided and customers have to purchase it.

Precautions for installation:

- Ensure that the PE terminal of the power arrester is properly grounded.
- After connecting the switch AC power plug to the socket of the power arrester (surge protection cable row), surge protection function implements if the RUN LED is Green and the ALARM LED is OFF.
- If the alarm LED on the power arrester is red, check whether there is the poor grounding connection or

reversed connection of null and live lines. You can use the multimeter to check the polarity of the power socket for the arrester when the LED is red. If the N line is on the left and the L line is on the right, the arrester PE terminal is not grounded. If the L line is on the left and the N line is on the right, the polarity of the arrester power cable is reversed. If the LED is still red, the arrester PE terminal is not grounded.

Installing the Ethernet Port Arrester

During the switch usage, the Ethernet port arrester must be connected to the switch to prevent the switch damage by lightning before the outdoor network cable connects to the switch.

Tools: cross or straight screwdriver, multimeter, and diagonal pliers

Installation steps:

(1) Tear one side of the protection paper for the double-sided adhesive tape and paste the tape to the framework of the Ethernet port arrester. Tear the other side of the protection paper for the double-sided adhesive tape and paste the Ethernet port arrester to the switch framework. The paste location for the Ethernet port arrester must be as close to the grounding terminal of the switch.

(2) Based on the distance of the switch grounding terminal, cut the grounding line for the Ethernet port arrester and firmly tighten the grounding line to the grounding terminal of the switch.

(3) Use the multimeter to check whether the grounding line for the arrester is in good contact with the switch grounding terminal and the framework.

(4) According to the *Ethernet Port Arrester Hardware Installation Guide*, connect the arrester using the adapter cable (note that the external network cable is connected to the end of IN, while the adapter cable connected to the switch is connected to the end of OUT) and check whether the LED on the board is normal.

(5) Use the nylon button to bundle the power cables.

Figure 8-2 Schematic Diagram for the Ethernet Port Arrester Installation

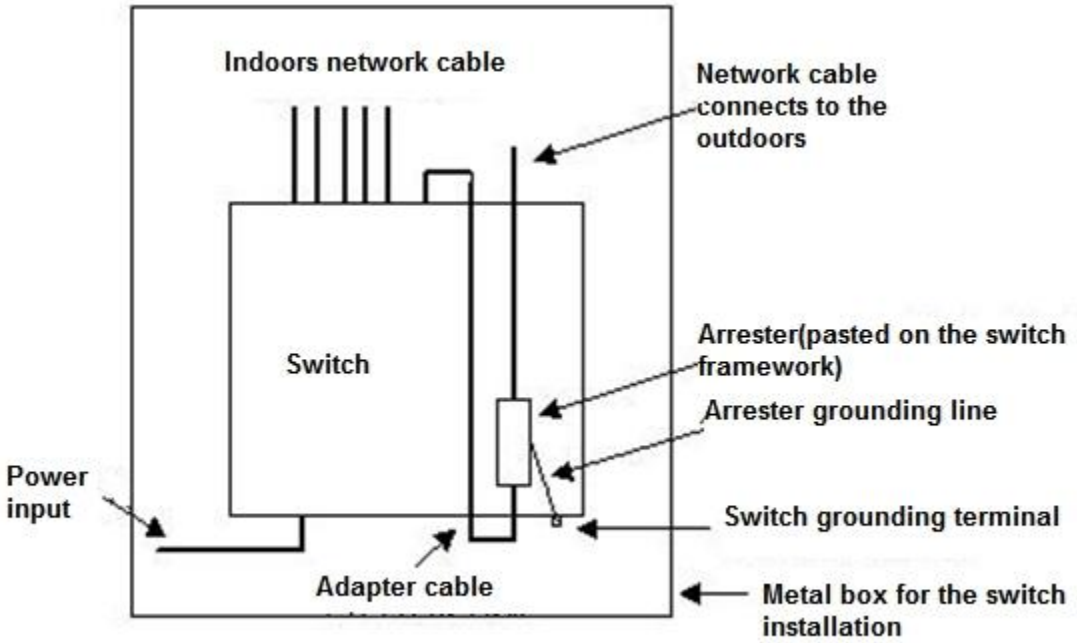

Note

- The Ethernet port arrester applies to only the 10M/100M electrical Ethernet ports with the RJ45 connector.
- The Ethernet port arrester is provided by customers. For more information about arrester installation, refer to *Ethernet Port Arrester Hardware Installation Guide*.

To prevent the performance of the Ethernet port arrester from being affected, note the following points:

- Reversed direction of the arrester installation: Connect the external network cable to the IN end and connect the switch Ethernet port to the OUT end.
- Poor arrester grounding: The grounding line must be as short as possible to ensure that it is in good contact with the switch grounding terminal. Use the multimeter to confirm the contact after grounding.
- Incomplete arrester installation: If more than one port is connected to the peer device on the switch, install the arresters on all connection ports for surge protection.

9 Appendix D Cabling Recommendations in Installation

When RG-ES200 series switches are installed in standard 19-inch cabinets, cables are tied in the binding rack on the cabinet by the cabling rack, and top or bottom cabling is adopted according to the actual situation in the equipment room. All cable connectors should be placed at the bottom of the cabinet in an orderly manner but not outside the cabinet. Power cables are routed beside the cabinet, and top or bottom cabling is adopted according to the actual situation in the equipment room, such as the position of the DC power distribution box, AC socket, or surge protection box.

Requirement for the Minimum Cable Bending Radius

- The bending radius of a power cord, communication cable, and flat cable should be five times greater than their respective diameters. The bending radius of these cables that often bend or is removed or installed should be seven times greater than their respective diameters.
- The bending radius of a common coaxial cable should be seven times greater than its diameter. The bending radius of this type of cables that often bend or is removed or installed should be 10 times greater than its diameter.
- The bending radius of a high-speed cable (for example, SFP cable) should be five times greater than its diameter. The bending radius of this type of cables that often bend or is removed or installed should be 10 times greater than its diameter.

Requirement for the Minimum Fiber Bending Radius

- The diameter of a fiber tray to hold fibers cannot be 25 times less than the diameter of the fiber.
- When moving an optical fiber, the bending radius of the fiber should be equal to or 20 times greater than the diameter of the fiber.
- During cabling of an optical fiber, the bending radius of the fiber should be equal to or 10 times greater than the diameter of the fiber.

Precautions for Bundling Up Cables

- Before bundling up cables, correctly mark labels and stick the labels to cables.
- Cables should be neatly and properly bundled, as shown in Figure 9-1.

Figure 9-1 Bundling Up Cables (1)

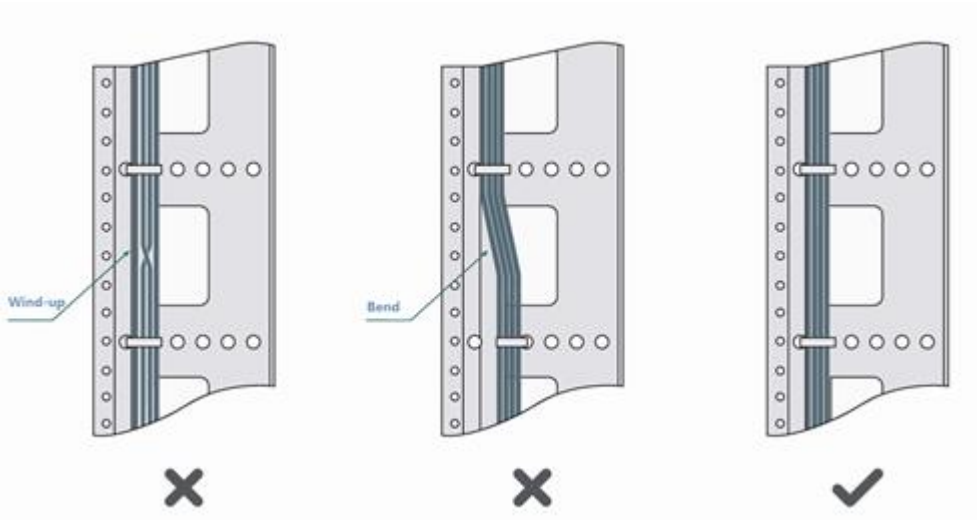

- Cables of different types (such as power cords, signal cables, and ground cables) should be separated in cabling and bundling. When they are close, crossover cabling can be adopted. In the case of parallel cabling, maintain a space of at least 30 mm for power cords and signal cables.
- The binding rack and cabling slot inside and outside the cabinet should be smooth, without sharp corners.
- The metal hole traversed by cables should have a smooth and fully rounding surface or an insulated lining.
- Proper buckles should be selected to bundle up cables. It is forbidden to connect two or more buckles to bundle up cables.
- After bundling up cables with buckles, you should cut off the remaining part. The cut should be smooth and trim, without sharp corners, as shown in Figure 9-2.

Figure 9-2 Bundling Up Cables (2)

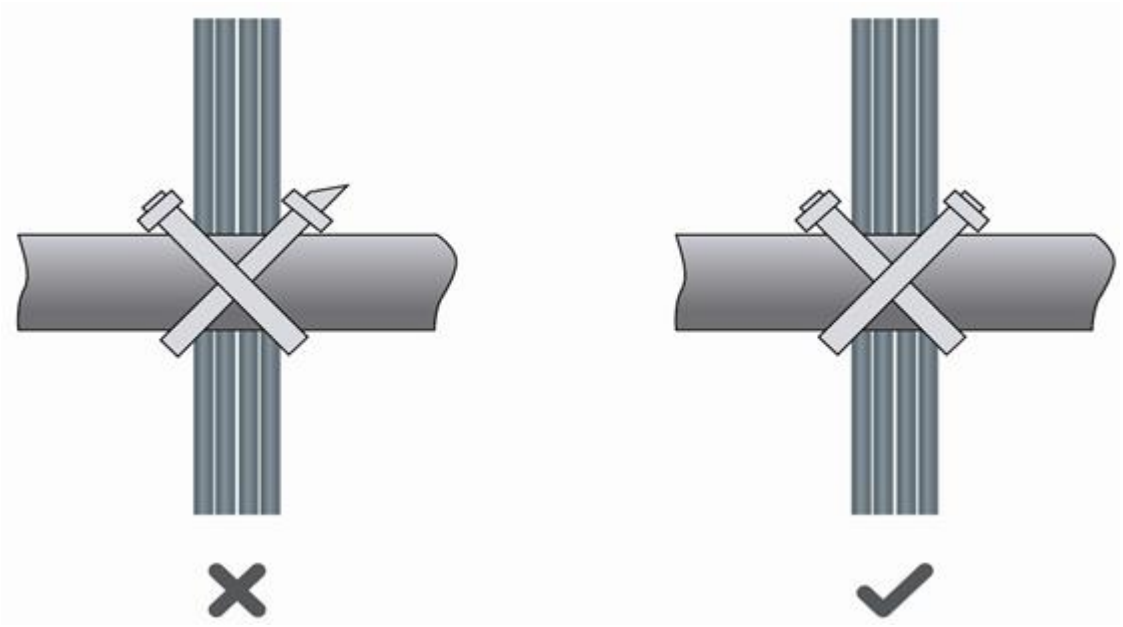

- When cables need to bend, first bundle them up. However, the buckle cannot be bundled within the bending area. Otherwise, significant stress may be generated in cables, breaking cable cores.

Figure 9-3 Bundling Up Cables (3)

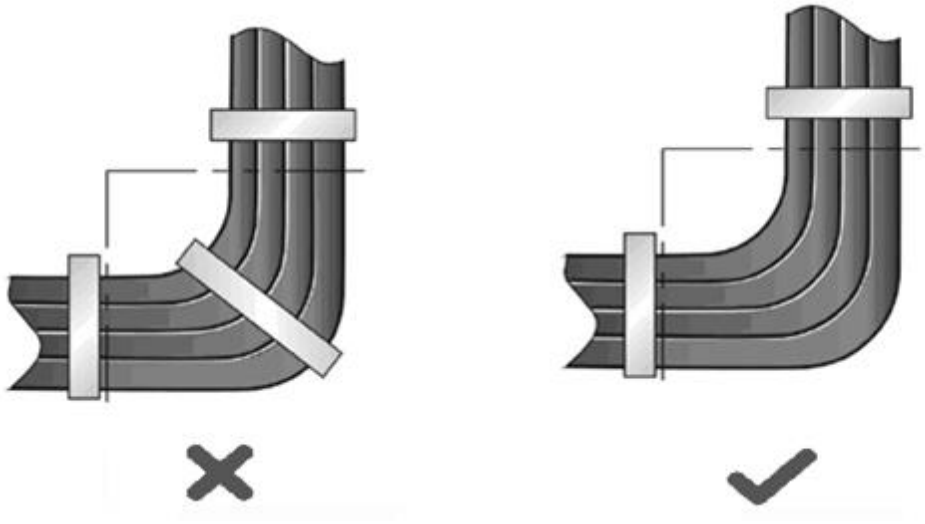

- Cables not to be assembled or remaining parts of cables should be folded and placed in a proper position of the cabinet or cabling slot. The proper position will not affect device running or cause device or cable damage during commissioning.
- Power cords cannot be bundled on guide rails of moving parts.
- Power cables connecting moving parts such as door grounding wires should be reserved for access after being assembled. When the moving part reaches the installation position, the remaining part should not touch heat sources, sharp corners, or sharp edges. If heat sources cannot be avoided, high-temperature cables should be used.

- When using screw threads to fasten cable terminals, the bolt or screw must be tightly fastened, and anti-loosening measures should be taken, as shown in Figure 9-4.

Figure 9-4 Cable Fastening

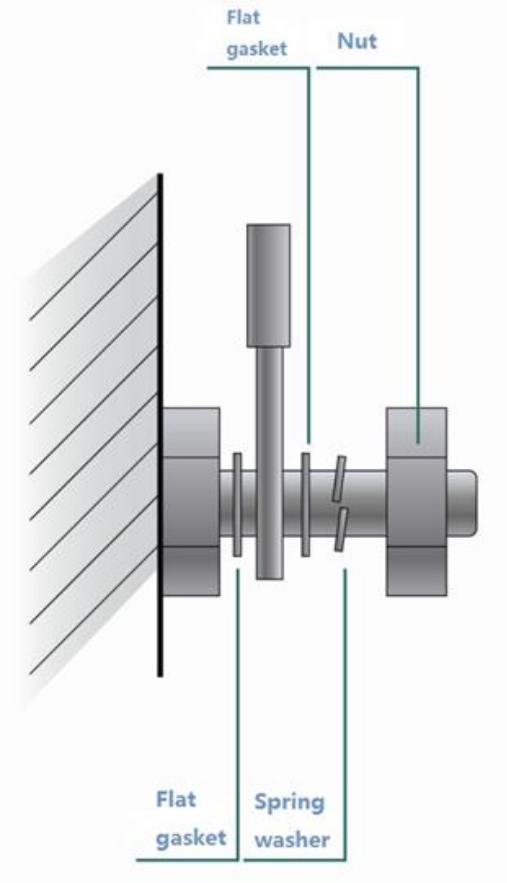

- The hard power cable should be fastened by the terminal connection area to prevent stress.
- Do not use self-tapping screws to fasten terminals.
- Power cables of the same type in the same cabling direction should be bundled up into cable bunches, with clean and straight cables in cable bunches.
- Binding by using buckles should be performed according to Table 9-1.

Table 9-1

Cable Bunch Diameter (mm)	Binding Space (mm)
10	80–150
10–30	150–200
30	200–300

- No knot is allowed in cabling or bundling.

For solder-less terminal blocks (such as air switches) of the cold pressing terminal type, the metal part of the cold pressing terminal should not be exposed outside the terminal block during assembly.

10 Appendix E Site Selection

- The equipment room should be at least 5 km away from the heavy pollution source such as the smelter, coal mine, and thermal power plant, 3.7 km away from the medium pollution source such as the chemical industry, rubber industry, and electroplating industry, and 2 km away from the light pollution source such as the food manufacturer and leather plant. If the pollution source is unavoidable, the equipment room should be located on the windward side of the pollution source perennially with advanced protection.
- The equipment room should be at least 3.7 km away from the sea or salt lake. Otherwise, the equipment room must be sealed, with air conditioner installed for temperature control. Saline soil cannot be used for construction. Otherwise, you should select devices with advanced protection against severe environment.
- Do not build the equipment room in the proximity of livestock farms. Otherwise, the equipment room should be located on the windward side of the pollution source perennially. The previous livestock house or fertilizer warehouse cannot be used as the equipment room.
- The equipment room should be firm enough to withstand severe weather conditions such as windstorm and heavy rain as well as away from dust. If the dust is unavoidable, keep the door and window away from the pollution source.
- The equipment room should be away from the residential area. Otherwise, the equipment room should meet the construction standard in terms of noise.
- Make sure that the air vent of the equipment room is away from the sewage pipe, septic tank, and sewage treatment tank. Keep the equipment room under positive pressure to prevent corrosive gas from entering the equipment room to corrode components and circuit boards. Keep the equipment room away from industrial boiler and heating boiler.
- The equipment room had better be on the second floor or above. Otherwise, the equipment room floor should be 600 mm higher than the highest flood level ever recorded.
- Make sure that there are no cracks or holes in the wall and floor. If there are cable entries in the wall or window, take proper sealing measures. Ensure that the wall is flat, wear-resistant, and dust-free, which must meet requirements of flame retarding, soundproofing, heat absorption, dust reduction, and electromagnetic shielding.
- Keep the door and the window closed to make the equipment room sealed.
- The steel door is recommended for soundproofing.
- Sulfur-containing materials are forbidden.
- Pay attention to the location of the air conditioner. Keep the air conditioner from blowing wind straight toward the device or blowing water drops from the window or air vent toward the device.